INTERNATIONAL JOURNAL OF ADVANCE RESEARCH, IDEAS AND INNOVATIONS IN TECHNOLOGY

ISSN: 2454-132X
Impact Factor: 6.078
(Volume 7, Issue 4 - V7I4-1229)
Available online at: https://www.ijariit.com

Inductor coupled converter

R. Kotesh
koteshkuppam.106@gmail.com
Kuppam Engineering College, Ekarlapalle, Andhra Pradesh

M. Vignesh
vigneshviggi269@gmail.com
Kuppam Engineering College, Ekarlapalle, Andhra Pradesh

B. Lakshmikanth
lakshmikanth.b0156@gmail.com
Kuppam Engineering College, Ekarlapalle, Andhra Pradesh

A. Raman
ramkaran2705@gmail.com
Kuppam Engineering College, Ekarlapalle, Andhra Pradesh

M. Seenivasan
m.seenivasan@kec.ac.in
Kuppam Engineering College, Ekarlapalle, Andhra Pradesh

ABSTRACT

This research work presents a high gain direct current–direct current (DC–DC) converter which is derived from a traditional boost converter. Distributed renewableenergy sources such as photovoltaic (PV) modules, wind and fuel cells are becoming possible alternatives. However, to connect these systems to the grid, reliable DC–DC boost converters with high voltage gain is becoming a requirement. Firstly, a new open-loop DC–DC boost converter with superior performance in terms of voltage step-up ratio and reduced voltage stress on the switches, compared to other existing high gain DC–DC boost converter counterparts is proposed.Along with analyzing the operation principle of the proposed converter.This converter can easily achieve a gain of 20 while benefiting from the continuous input current, effectively maintain the voltage output at the required level, closed loop dc-dc converter with Proportional–Integral-Differential (PID) controller, a multi-loop with Proportional–Integral (PI) was proposed and simulated. a chargecontroller was designed and operated along with closed loop dc-dc converter to supply load with two different voltage requirements. Based on the simulation results the proposed controller can maintain the output voltage at the required level with respect to the changes in load.

Keywords: *Converter, High Voltage, Step-Up*

1. INTRODUCTION

Direct Current–Direct Current (DC–DC) boost converters ar wide employed in power, industrial, and client merchandise. Renewable energy sources is associate acceptable different for the fossil fuels because of their advantage of inexhaustible resources, fuel diversification, and environmental friendliness. to attach these systems to the network, DC–DC boost converters with wide dc conversion ratios ar required. the essential DC–DC boost converters don't seem to be appropriate for this application because of the necessity of operative at extreme duty ratios, thus different topologies have to be compelled to be thought of. the most objective of such a system is to maximise energy yield and minimize maintenance. one in every of the most important challenges baby-faced by styleers of today's DC– DC boost converter's is to optimize the converters design supported contradictory constraints: low value and inflated life. an answer to enhance the life and potency of DC–DC boost converters is by reducing the voltage stress on the switches. the long run converters ought to additionally scale back the difficulty of voltage fluctuations occurring because of the intermittent nature of renewable energy sources. There ar 2 main styles of DC–DC boost converters: linear and switch-mode. In general, linear DC–DC boost converters don't seem to be energy economical and ar terribly giant, whereas switch-mode DC–DC boost converters will meet the 3 needs antecedently mentioned. In shift converters, lossless parts like economical switches, inductors, and capacitors ar wont to store energy quickly and transmit it to the load. By properly selecting the shift frequency, inductance, and capacitance values, the device is of little size and light-weight weight and might filter giant electrical energy (AC) ripples, so the steady-state performance needs ar met. Despite all the benefits of switches, they additionally build the circuits nonlinear and tough to research.

Switched DC–DC boost converters is classified into 2 classes, pulse dimension modulation (PWM) converters and soft shift converters, that also are known as resonant converters. In soft-switching converters the inflated peak currents for constant output voltage may be a major disadvantage. mistreatment PWM technique, there's associate economical regulation over a good vary of voltage inputs and outputs. the sole disadvantage with this technique is tiny loss of power throughout shift attributable to the finite values of voltage and current throughout the shift transient.

Analysis, control, and stabilization ar the most problems in shift converters. along side novel style, the device must be properly analyzed. To facilitate the analysis and style of those converters, an honest analysis technique is additionally required. the foremost standard change of magnitude DC–DC boost

converters until date ar mentioned within the following section.

2. PROPOSED SYSTEM

A novel DC–DC converter that address the issues stated in literature review is proposed inthis research work. The proposed converter is inspired from the charge pump voltage converter. Initially, by integrating the diode-capacitor voltage multiplier (VM) stages along with inductors to the boost converter a newly configured non-isolated DC–DC boost converter is proposed. This has the higher overall voltage gain and reduced voltage stress. The absence of both transformer and extreme duty cycle in the proposed converter allows it to operate at high switching frequencies, thereby resulting in higher efficiency,reduced size, weight, simple structure and control. This will help in connecting the standalone renewable generating units to the distribution systems effectively.

One of the critical requirements of future distribution systems in the presence of distributed generation is active power management. It is critical to ensure the output AC voltage maintain within the standard limits by sensing the sudden solar ramping and automatically varying the output voltage of the DC-AC converter (inverter). But rather than controlling the inverter, controlling the DC–DC boost converter exhibits several advantages, the most important of which is easy control and quality of the output voltage.

the proposed converter is modified to use for electric vehicles (EV). EV's are growing at a rapid pace in the internal combustion engine dominated transportation sector and bring environmental and economic benefits to society. Use of roof mounted solar array (RSA) systems to generate the energy required for operating a thermoelectric system and the compressors for maintaining the car cabin temperature helps to extend the cruisingrange of electric vehicles. In such systems, managing and maintaining the output voltage is crucial. So, the proposed DC–DC boost converter needs a robust controller. The controller of a converter should guarantee first that the system is stable under all operating conditions, and secondthat the system is robust enough to maintain the desired operational performance when a circuit disturbance.

3. BLOCK DIAGRAM

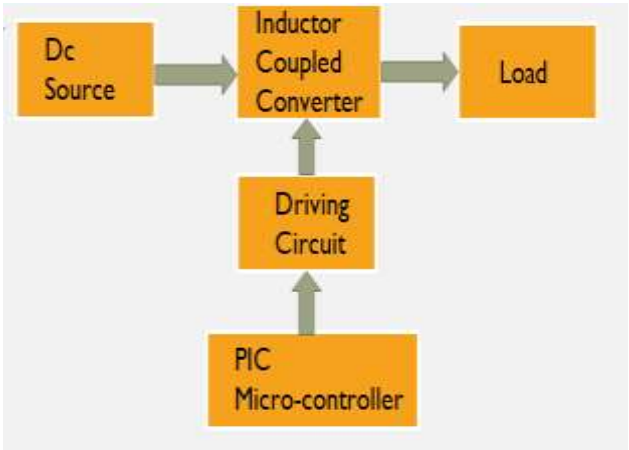

Fig. 1: Block Diagram

The witnessed block diagram for the system "inductor coupled converter" is shown in the figure 1 To automatically achieve and maintain the desired output voltage by comparing it with the reference voltage, a closed loop control is designed for the proposed converter. The closed-loop is formed with PI based pulse width modulation (PWM) controller.

4. WORKING

The proposed system is generally static device whose average output DC voltage is greater than its input DC voltage. The inductive network plays a main role in the project. The switching frequency is much higher than the natural frequency. when the control switches S is ON, and the diodes D_2, D_3 are forward-biased and the diodes D_1, D_o are reverse-biased. when the control switches S is OFF, the diodes D_2, D_3 are reverse-biased. Mosfets can be used to improve greater voltage then normal boost converter.

A steady-state operation requires that the inductor current at the end of the switching cycleis the same as that at the beginning, meaning that the net change in inductor current over one periodis zero.

5. CIRCUIT DIAGRAM

A circuit design for proposed system "inductor coupled converter" with Arduino microcontroller was designed. The proposed circuit model for the system is shown in the fig 2.

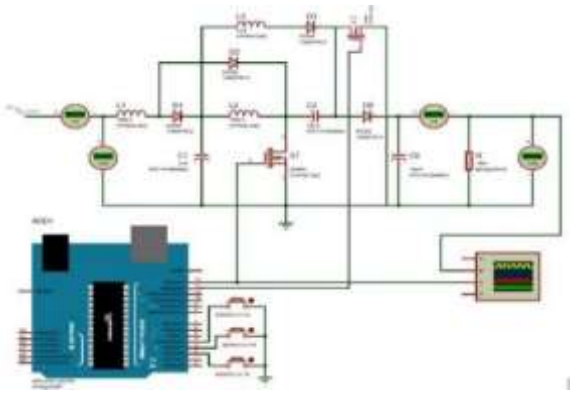

DC–DC boost converters with faster switching frequencies are becoming popular due to their ability to decrease the size of the output capacitor and inductor to save board space. A DC–DC boost converter switching at 1 or 2 MHz sounds like a great idea, but there is more to understand about the impact to the power supply system than size and efficiency.

Here the pulse width modulation (PWM) signal was generated using the microcontroller operating at a switching frequency of 100 kHz.

6. CONCLUSION

DC–DC boost converter with a high voltage step-up ratio is presented in this paper, which consists of two active switches, four passive switches and three LC filters. By increasing the passive inductor-capacitor cells, the voltage gain of the system is improved. The operation and voltage transfer function of the proposed converter is derived under continuous conduction mode. In comparison with other dc-dc boost converter counterparts, the proposed converter has improved characteristics in terms of high voltage step-up ratio and reduced voltage stress on the active and passive switches. The high voltage gain at low duty cycles results in the reduction of conduction losses. Use of a complimentary controlled active switch resulted in stress-free control system. The analysis and performance have been fully validated experimentally on a 15V input, 418V output hardware prototype. Experimental results demonstrate that the proposed converter is an excellent candidate for high step-up voltage gain applications.

The proposed controller gave a constant output voltage from a variable input (rated ± 10%). This helps in operating the thermostat systemsmore effectively and increases the life.

7. ACKNOWLEGEMENT

We kindly thank our College Management, Department, Head of Department and our Project Guide who made us to take up with idea to build an innovative and reliable prototype useful for all individuals domestically and industrial wise.

8. REFERENCES

[1] Li W., and He X., Review of nonisolated high-step-up DC/DC converters in photovoltaic grid-connected applications, *IEEE Transactions on Industrial Electronics*, 2011, 58(4), pp. 1239–1250 .

[2] Ismail E.H., Al-Saffar M.A., Sabzali A.J., and Fardoun A.A., A family of single-switch PWM converters with high step-up conversion ratio, *IEEE Transactions on Circuits and System I: Regular Papers*, 2008, 55(4), pp. 1159–1171.

[3] Chen S.M., Liang T.J., Yang L.S. and Chen J.F., A cascaded high step-up DC–DC converter with single switch for microsource applications, *IEEE Transactions on Power Electronics*, 2011, 26(4), pp. 1146–1153.

[4] Nymand M., and Andersen M.A., High-efficiency isolated boost DC–DC converter for high-power low-voltage fuel-cell applications, *IEEE Transactions on Industrial Electronics*, 2010, 57(2), pp. 505–514.

[5] Tofoli F.L., de Castro Pereira D., de Paula W.J., and Júnior D.D.S.O., Survey on non- isolated high-voltage step-up DC–DC topologies based on the boost converter, *IET power Electronics*, 2015, 8(10), pp. 2044–2057.

BIBLIOGRAPHY

R. Kotesh
Kuppam Engineering College, Ekarlapalle, Andhra Pradesh, India

M. Vignesh
Kuppam Engineering College, Ekarlapalle, Andhra Pradesh, India

B. Lakshmikanth
Kuppam Engineering College, Ekarlapalle, Andhra Pradesh, India

A. Raman
Kuppam Engineering College, Ekarlapalle, Andhra Pradesh, India

M. Seenivasan
Kuppam Engineering College, Ekarlapalle, Andhra Pradesh, India

