INTERNATIONAL JOURNAL OF ADVANCE RESEARCH, IDEAS AND INNOVATIONS IN TECHNOLOGY

ISSN: 2454-132X
Impact factor: 4.295
(Volume 5, Issue 6)
Available online at: www.ijariit.com

Smart license for E-Government

Shreyash Vijay Ankam
ankam.shreyash777@gmail.com
Pune Vidhyarthi Griha's College of Engineering and Technology, Pune, Maharashtra

Shivani Vishal Patil
shivanipatildna@gmail.com
MKSSS's Cummins College of Engineering for Women, Pune, Maharashtra

Dheeraj Dhanaji Patil
patildheeraj259@gmail.com
Smt. Kashibai Navale College of Engineering, Pune, Maharashtra

ABSTRACT

In the rapidly growing technology world, electronics have taken over a leap in every domain, storing the copious data into small chip. A smart card, chip card, or integrated circuit card (IC) is any pocket-sized card with embedded integrated circuits. Smart Cards are secure portable storage devices used for numerous applications especially security related to use confidential information involving access to system's database either online or offline. Smart cards are manufacture using plastic, generally polyvinyl chloride (PVC). This research is chiefly to study the security principles of smart cards and assess the security aspect effects on smart card technology usage and adoption. The proposed Smart License system for E-government is very useful for the purpose of denying access to driving the vehicle without having valid license. The project comprises microcontroller-based system having 89S52 controller, Smart Card, GSM Module and respective Sensors. The system does verification of the License expiry of the driver with the help of RTC Details. In case of license Expiry of the user system will send message to the RTO office number saved in the system. Along with License verification the system is also useful for LPG leakage detection in the car. The LPG Leakage detection helps user in order to avoid further accidental conditions and step towards to diminish excessive pollutant release by the particular car.

Keywords— *AT24C04, 89S52, MAX 232 IC, MQ-6, ADC 0809, LCD, SIM 900, Buzzer*

1. INTRODUCTION

Nowadays, in a developing country Road Transport is an important sector. The Challenge is the number of vehicles on the road has increased manifold during the last ten years with a corresponding increase in the number of drivers. To manage the issuance and tracking of driving License and penalties for traffic offenses with such great number of drivers with a compounded growth year after year, an Integrated Solution with timely access to information, across all locations, is the need of the hour. Regional Transport Authorities exercise and discharge the powers and functions as per the Motor Vehicles Act. The state is divided into regions for implementation of rules and regulations of transport and fees. Smart cards have been used excessively during the last couple of decades. In recent years though, a new generation of smart cards evolved they have become programmable smart cards. In a variety of markets and disciplines the room of uses of a smart card has expanded each year to include application. Globally, Smart card technology is being broadly used in identity management applications. In recent years, driving license is most used as identity document across the world and for security-sensitive credentialing processes such as opening bank accounts or boarding airplanes. In a bid to simplify the process of acquiring a driving license and eliminate middlemen, the state governments are introducing use of smart cards for Driving License. The migration for more secure credit-card format driving licenses (instead of paper) has already been set by many governments. To make this scenario less complicated we have design system which includes production of secure smart card, registration and data capture, personalization and card issuance, managing document and applications. Also, system will able to detect the LPG transmission of vehicle. If LPG threshold is higher than threshold level it'll send data to government further then by using this data government will be able to send alarming message to user to take some action.

2. PURPOSE

- The user shall not be allowed to start the car if it poses an invalid or else expired license.
- The latest updates regarding users' licenses and car CO emission rates will be reported to RTO.
- Using MQ-6 necessity steps can be taken in order to reduce the emission rate, reducing air pollution by minute percent.
- Another aspect of the project is to forbid users, driving vehicles who are below age limit.

3. COMMON CONTROL ARCHITECTURE

The succeeding list displays characteristic system control architecture.

3.1 AT89S52

A low-power, high-performance CMOS 8-bit with 32 Programmable I/O Lines microcontroller, is manufactured by means of Atmel's high-density nonvolatile memory technology. Being compatible with 80C51 instruction set and pinout. All the

program memory can be reprogrammed in-system or by a conventional nonvolatile memory programmer using the 8Kbytes of in-system programmable flash memory.

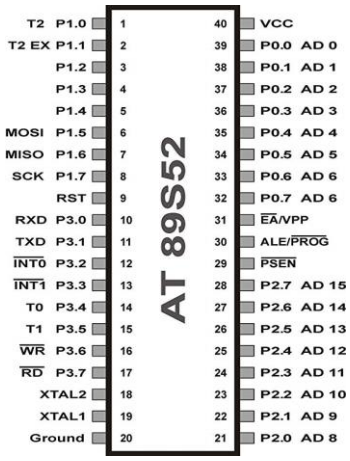

Fig. 1: AT89S52

By grouping multipurpose 8-bit CPU with an in-system programmable Flash on a monolithic chip, the Atmel AT89S52 is a powerful microcontroller. Which delivers a highly-flexibility and cost-effective resolution to many embedded control applications. Operation ranges from 4.0 to 5V. Three 16-bit Timer/Counters provides time delay intervals for triggering a load, supporting watchdog timer Eight Interrupt Sources for hardware attention critical events like power failure, memory faults, and machine errors. Interrupt Recovery from Power-down Mode. Enhancing the microcontroller operation using different power saving modes Low-power Idle and Power-down Modes.

3.2 AT24C04

AT24C04 is a contact card, utilized it as a smart license card in the project. This card can also be used in hotels, Membership, E-ticket, etc. The smart card consists of writing Protect Pin for hardware data protection which mainly incorporates user's license validity and personal information. Enhancing Bidirectional Data Transfer using I2C-compatible (2-wire) Serial Interface by providing path with microcontroller. Benefiting High-reliability of 1,000,000 Write Cycles.

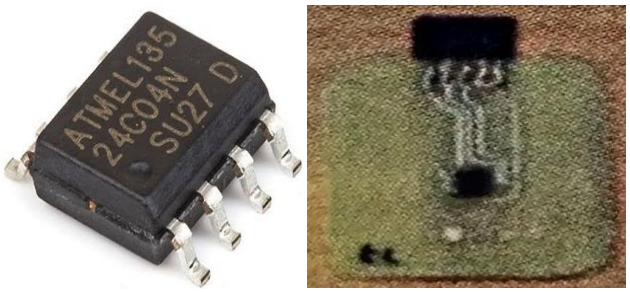

Fig. 2: AT24C04

It is Organized as 512 x 8 (4K), or 1024 x 8 (8K). Operating on Low-voltage and Standard-voltage VCC = 1.7 - 5.5 V. Another dominant feature is: Schmitt Trigger, Filtered Inputs for Noise Suppression and 16-byte Page Write Mode. It supports user-modifiable read-only memory (ROM) which can be reprogrammed and erased (written to) frequently over the application of higher than normal electrical voltage.

3.3 MAX 232 IC

MAX232 IC is service to convert the TTL/CMOS logic levels to RS232 logic levels meanwhile serial communication of microcontrollers with PC. Considering that the serial communication in PC works on RS232 standards (-25 V to + 25V) controller operates at the TTL logic level (0-5V).

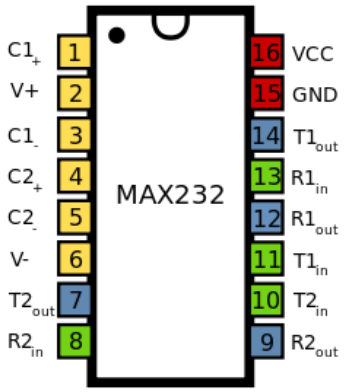

Fig. 3: MAX232

Intermediate link is grant through MAX232 for communication between two. The receivers (R_1 and R_2), accept ±30V inputs. The drivers (T_1 and T_2), known as transmitters, transmute the TTL/CMOS input level into the RS232 level. The transmitters withdraw input from controller's serial transmission pin and forward the output to RS232's receiver. The receivers, on the other hand, take input from transmission pin of RS232 serial port and forward serial output to microcontroller's receiver pin. MAX232 demands four external capacitors whose value ranges from 1µF - 22µF.

3.4 MQ-6

MQ-6 is a convenient liquefied Petroleum Gas (LPG) sensor, suited for detecting LPG (comprising a great amount of propane and butane) concentrations in the air. The MQ-6 can detect gas concentrations anyplace ranging from 200 to 10000ppm.This sensor has high sensitivity and fast response time.

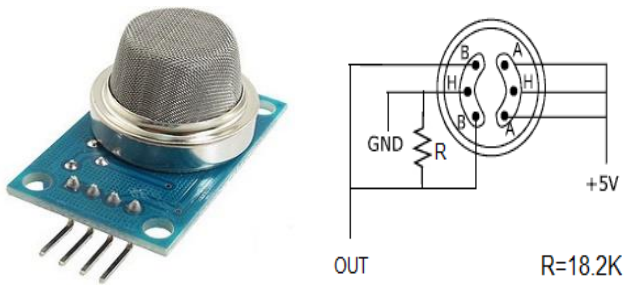

Fig. 4: MQ-6

This sensor produces output is an analog resistance. Drive circuit operates by powering the heater coil with 5V, adding load resistance, and connecting the output to an ADC.

$$\therefore \text{Rs (Resistance of sensor)} = (Vc/VRL-1) \times RL$$

The applicant in gas leakage detecting equipment's in family and industry, due to high sensitivity to LPG, iso-butane, propane.

3.5 ADC 0808

The project comprises the conversion of analog output from the MQ-6 sensor to digital so that the corresponding signal can be processed by the controller. The digital output will be obtained from the pins 2^{-1} (OUT1) to 2^{-8} (OUT8) and the analog voltage should be connected to Vin (+) pin. ADCs are used in TV tuner card sand for digital data processing in microcontrollers in the form of on-chip 8-bit, 10-bit ADCs. ADC 0808 is used.

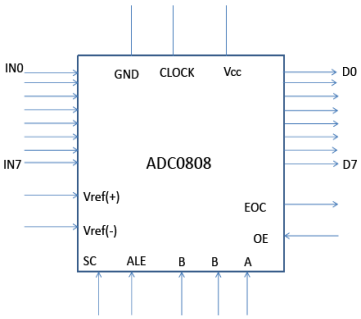

Fig. 5: ADC 0808

It has 28 pins with an 8-channel multiplexer, 8-bit analog to digital converter and microprocessor compatible control logic the 8 input channels are IN0-IN7, and Vref (+) =5V; Vref (-) = and. In order to select the inputs from IN0-IN7 address lines A, B and C addresses are used.

Table 1: Channel selection

Selected Analog Channel	Address Line		
	A	B	C
IN0	L	L	L
IN1	L	L	H
IN2	L	H	L
IN3	L	H	H
IN4	H	L	L
IN5	H	L	H
IN6	H	H	L
IN7	H	H	H

3.6 LCD

Liquid crystal display (LCD) is a user-friendly output device which uses the liquid crystal for displaying alphabets and numbers or any custom generated characters. Who's operating Voltage ranges from 4.7V to 5.3V. LCD consists of 2 rows and 16 columns. Each row is capable of printing 16 characters. The current consumption is 1mA without backlight. Where single character is built by a 5×8-pixel box. LCD works on two-mode 8-bit and 4-bit mode. Available in Green and Blue Backlight.

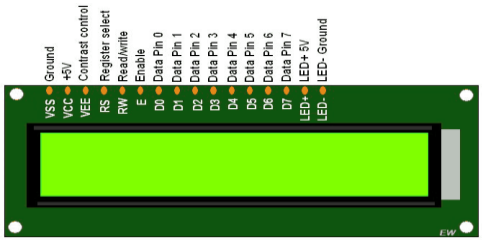

Fig. 6: LCD

3.7 SIM 900

It is GSM/GPRS works on a frequency of 850 or 900 or 1800 or 1900MHz, Quad-band cell phone and used for oral communication (provided that it is connected to a small loudspeaker and microphone) and for SMSs. Internally, the module is managed by an AMR926EJ-S processor, the communication with the circuit interfaced with the cell phone (through an integrated TCP/IP stack), and controls phone communication, data communication. TTL serial interface is responsible for communicating all data comparative to the SMS received and the SMSs come in during TCP/IP sessions in GPRS, but also of receiving the circuit commands using AT standard or AT-enhanced SIMCom type. The circuit absorbs maximum of 0.8 A during transmission with a continuous supply of 3.4 and 4.5 V.

Fig. 7: SIM 900

3.8 RTC

The DS1307 (RTC) IC is an 8-pin device comprising a low-power clock/calendar with 56 Bytes of Non-volatile memory available to the user, with benefits of Low power consumption. The memory comprises of a 64 (8-bit registers) are addressed from 0 to 63 (from 00H to 3FH in hexadecimal arrangement). The first 8-registers are utilized for clock register for keeping a track of the current year, month, day, as well as the current time with fully assembled and pre-programmed with the current time and the remnant 56 registers, mainly use as RAM, containing temporary variable.

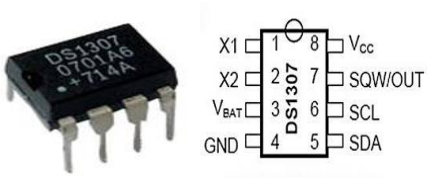

Fig. 8: RTC

DS1307 has two, START and STOP data transfer conditions required when a device wants to establish communication with a device in the I2C network. Lithium coin cell battery (CR1225 41mAh) will run the module for a minimum of 9 years unaccompanied external 5V power along with an accuracy calendar up to the year 2100.

3.9 Buzzer

In electronic buzzers also known as a beeper is an audio signaling device, which may be mechanical, electromechanical, or piezoelectric. Due to Lightweight, simple construction it is often applicants in alarm devices and timers. The beep-beep sound in buzzer is produced due to the vibrations which are made by an oscillator circuit which drives a piezoelectric.

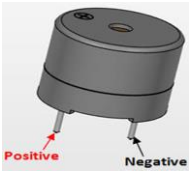

Fig. 9: Buzzer

Piezo buzzer works on the inverse principle of piezoelectricity, the phenomenon in which electricity is generated when mechanical pressure is applied to piezoelectric materials. Piezoelectric materials are either naturally available or man-made. Comprising the resonant frequency of 2300 Hz. When exposed to an alternating electric field piezoelectric material stretch or compress, in accordance with the frequency of the signal thereby producing sound.

3.10 Relay

A Single Pole Double Throw (SPDT) relay is connected to a port pin of the microcontroller through a driver transistor. The driver transistor is added to provide relay a requirement of a current of around 100ma at 12 V. It is used to operate the external solenoid forming part of a locking device or for operating any other electrical devices.

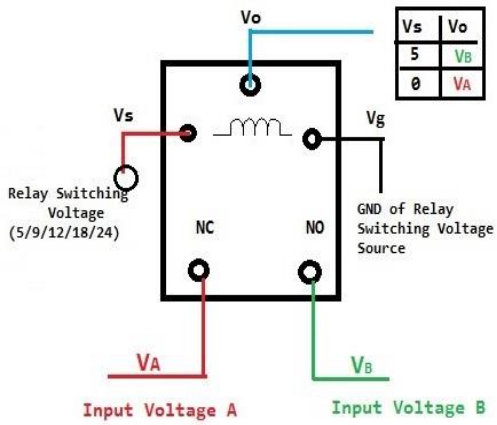

Fig. 10: Relay

Normally the relay remains off. The sudden moment when the pin of the microcontroller goes high, the relay operation starts. The transition when relay operates and releases. On a mechanical relay Diode D2, known as standard diode to prevent back EMF from damaging Q3, when the relay releases. LED (L2) indicates relay on.

4. PROPOSED SYSTEM

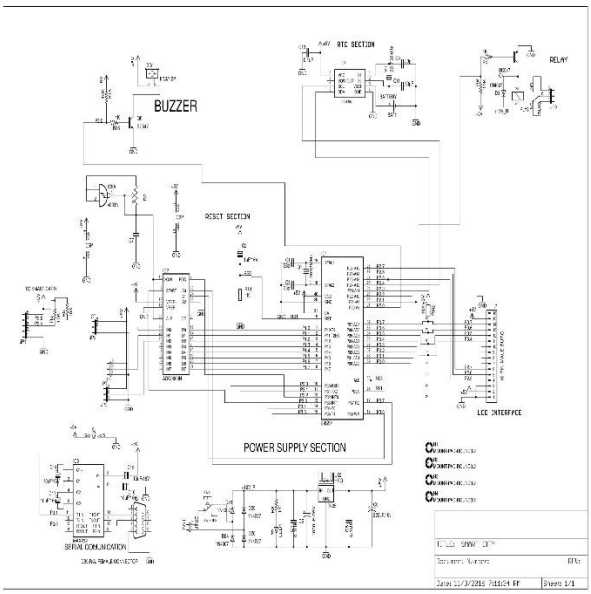

Fig. 11: Circuit diagram

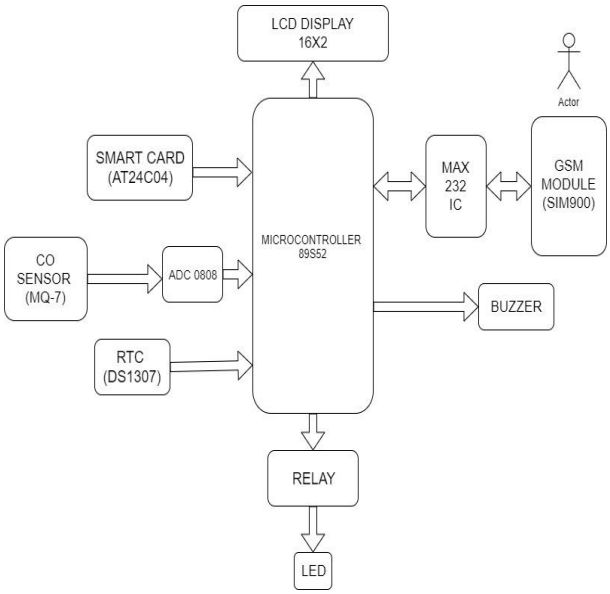

Fig. 12: Block diagram

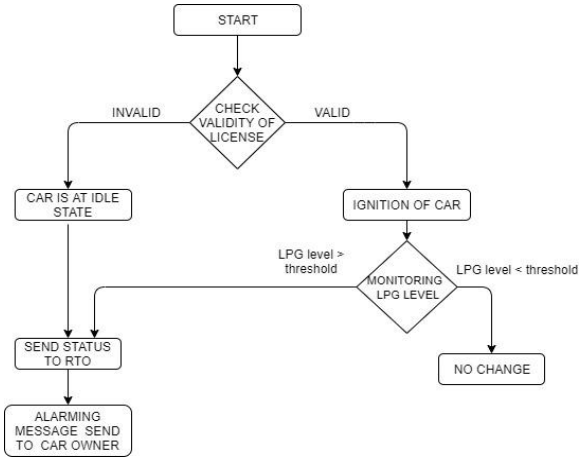

Fig. 13: Flow Diagram

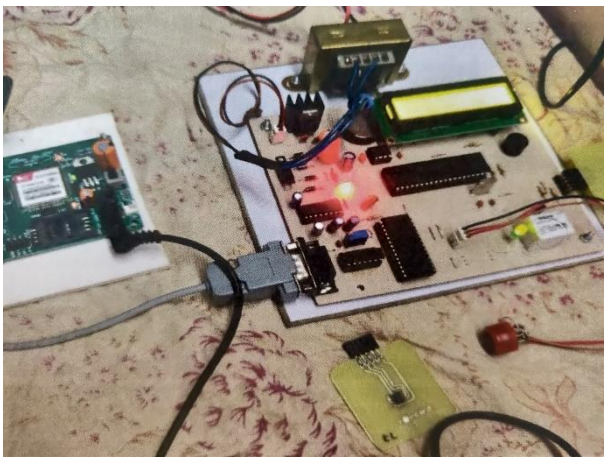

Fig. 14: Experimental setup

3.1 Software implementation

- Layout and schematic work: EAGLE software.
- Programming language: Assembly.
- Compiler: Keil-u-vision.

5. TESTING AND RESULT

Table 2: Component testing

Components	Voltage Rating
LM7805 input voltage	11.05V
LM7805 output voltage	4.89V
Sensor's input voltage	4.87V
L293d output voltage	11.04V

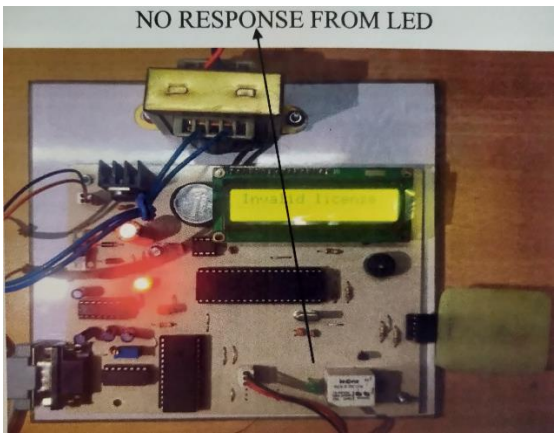

Fig. 15: Given license is invalid, subsequently LED will be turned OFF. The car will not ignite, buzzer indication is given to the user about expiry of license and a message is sent to the RTO about license expiry of that particular user

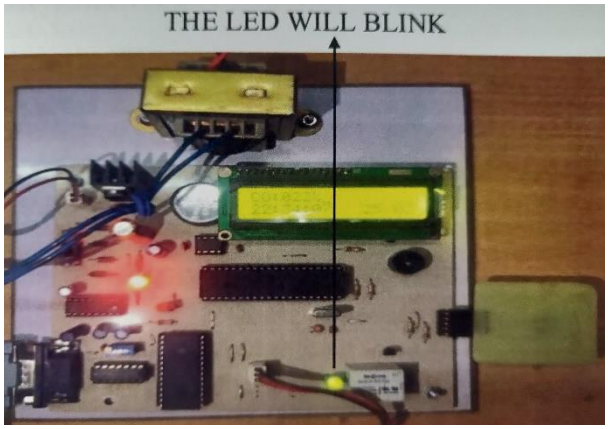

Fig. 16: Given license is valid, subsequently LED will be turned ON. The car will ignite, MQ-6 will sense car CO emission. If the CO level is above threshold, message will be sent to RTO

6. CONCLUSION

By using the proposed system, no one can drive without having valid driving license where verification is done with the help of RTC details. If License of driver is expired, then message will be sent to the RTO office and Carlock will not be opened. In this method, the system will also alert the user about LPG leakage detection. So that Safety precautions will be taken in order to avoid accidental conditions.

7. FUTURE SCOPE

We can add a feature of drunken detector in the proposed system so that drunk drivers will not be allowed to drive a car. This ensures safety of driver and decrease percentage of accidents. The present module can be interfaced with GPS module to find out vehicle location.

8. ACKNOWLEDGEMENT

The writers express their appreciativeness to the university and department for supplying crucial information and data alongside the applicable equipment, which were essential for finalizing this research paper.

9. REFERENCES

[1] K. Senthil Babu, Dr. C.Nagaraja, "Calibration of MQ-7 and Detection of Hazardous Carbon Mono-oxide Concentration in Test Canister", IJARIIT, Volume-4, Issue-1, 2018.

[2] C.H. Fancher, "In your pocket: smartcards", IEEE Spectrum (Volume: 34, Issue: 2, Feb. 1997)

[3] D. McElroy, E. Turban, "Using smart cards in electronic commerce", International Journal of Information Management, Volume 18, Issue 1, Pages 61-72, February 1998.

[4] Rankl, Wolfgang "Smart Card Applications: Design models for using and programming smart cards".

[5] Jerome Svigals, "Smart Cards: The Ultimate Personal Computer", Published by Macmillan Pub. Co., Original from the University of Michigan Digitized 19 Dec 2006.

[6] John McCrindle, "Smart Cards", Published by IFS, 1990, Original from the University of Michigan, Digitized 11 Dec 2007

[7] wireless sensor network http://en.wikipedia.org/wiki/Wireless_Sensor_Networks

[8] Rémi Brechignac, Grenoble (FR), "smart card and the process for manufacturing the same", united States Patent 6,374,486 B1, Apr. 23, 2002.

[9] https://simcom.ee/documents/SIM900/SIM900_AT%20Command%20Manual_V1.11.pdf

[10] https://mil.ufl.edu/3744/docs/lcdmanual/commands.html

