INTERNATIONAL JOURNAL OF ADVANCE RESEARCH, IDEAS AND INNOVATIONS IN TECHNOLOGY

ISSN: 2454-132X
Impact factor: 4.295
(Volume 5, Issue 2)
Available online at: www.ijariit.com

Railway trail defense structure based IoT

R. Senthil Kumar
senthil.gb@gmail.com
Adithya Institute of Technology, Coimbatore, Tamilnadu

I. Kirubakaran
imkiruba071@gmail.com
Adithya Institute of Technology, Coimbatore, Tamilnadu

A. Loganathan
logasathi1213@gmail.com
Adithya Institute of Technology, Coimbatore, Tamilnadu

K. Janani
jananik6898@gmail.com
Adithya Institute of Technology, Coimbatore, Tamilnadu

Pyndaplang Kharkongor
pyndap923@gmail.com
Adithya Institute of Technology, Coimbatore, Tamilnadu

ABSTRACT

The only scientific solution to natural calamities is the development of a system to predict, detect and take preventive measure using recent advancement in technology, Railway trail defense structure based IOT. Using two types of sensor to sense and detect the obstacles. In this project, we implement an idea such as using a camera for live stream monitoring and the sensor to detect the obstacles. The main part of this paper is RPI3 which control all the operation and passes the information through the webpage. The camera mounted on the front of the vehicle. PIR and ultrasonic sensor are used for sensing the moving and non-moving obstacles. Detecting any obstacles the signal will be sent to RPi3and it will transmit the signal to the webpage. The webpage will be transmitted to the monitor within the monitor the image of the object will appear and the locomotive pilot will turn off the engine. We also used GPS to track the train through the entire path and in which it stops due to any problems.

Keywords— *Raspberry Pi-3, IoT, Ultrasonic Sensor, PIR Sensor, Webcam Monitoring, GPS*

1. INTRODUCTION

The Indian Railway has one of the largest railway networks in the world, crossing over 1, 15,000 km in distance, all over India. In the rapidly flourishing country like India, accidents in the railroad railings are increasing day by day. Timely detection and identification of obstacle and human error in railway track circuits are crucial for safety. The project deals with one of the track monitoring methods to avoid train accidents. This system also proposes a real-time system which can monitor landslides and send warning signals to the concerned authorities. Human negligence and human error have become the primary cause of train accidents in India. A train accident also occurs due to natural crises. Currently, major train accident occurs in Madhya Pradesh hard on 6 August 2015. Second train accident occurs in Mumbai local train overshoots platform at church gate on 28 June 2015.

First train accident occurred due to natural crises and human negligence. Second train accident occurred due to human error.

To overcome all these limitations we develop a new system such as "Railway Trail defense structure based IOT."

2. HARDWARE-SOFTWARE REQUIREMENT

Hardware: RaspberryPi3, model-B, IR sensor, Ultrasonic Sensor and GPS module.
Software: HTML, OPEN CV, PHP, PYTHON.

3. SYSTEM DESCRIPTION

In this system, we have to use two sensors. One PIR sensor used for when an object, such as a human, passes in front of the train, the temperature at that point in the sensor's field of view will rise from that temperature to body temperature and then back again. The sensor converts the resulting change in the output voltage, and this triggers the detection. And two ultrasonic sensors are used for measuring the perpendicular distance and according to that convey a message to Raspberry Pi whether the obstacle is detected.GPS module is able to update the location of the system.

Raspberry Pi 3 is one of the controlling devices which is more efficiency quick response. Sensor is used to sensor the object on the railway trail. They detected the object and send the signal to the RPI3. The RPI3 will all the operation camera used for monitor all the way and will be live monitoring. The buzzer will activate when the signal received from the RPI3.GPS give the location in which the train moving and where ever it stops. Using GPS the main control room can be located the train where it going through. This project presents a rule based on IOT. Where applied for the defense of an accident on the railway trail.

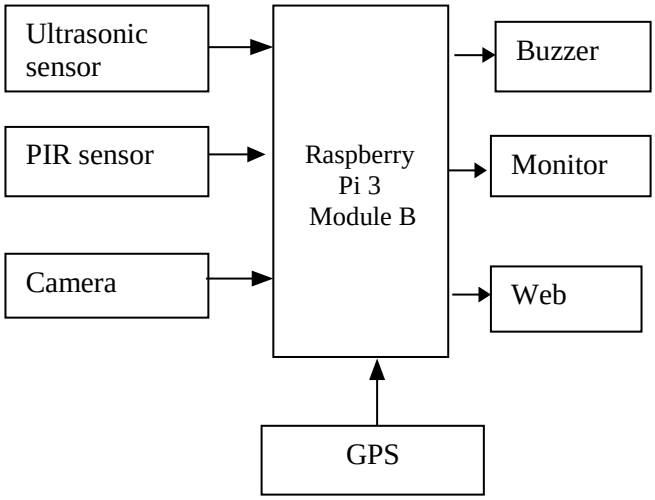

Fig. 1: Block diagram of system

3.1 Ultrasonic sensor

Our ultrasonic rangefinder is capable of allowing the user to determine his or her distance from an object or wall. When deciding on what type of project to design and construct, we decided that we wanted to create something that would have some practical use in life. Many groups in the past created video games, but we wanted to be different. We considered issues such as safety, user interface, and ease of use, and came up with the idea of making an ultrasonic rangefinder.

Fig. 2: Ultrasonic sensor

A rangefinder can be used in various applications such as a measuring device or an obstacle detection device.

3.2 PIR sensor

Once the motion is detected by sensing infrared fluctuations, a high is sent to the signal pin. These sensors work well in detecting human motion. PIR sensors are composed of a solid state piezoelectric chip. When exposed to infrared radiation, the chip generates an electric charge and this charge is amplified by an amplifier and thus the output voltage can be interfaced with other devices. The PIR Sensor has a range of approximately 5 meters and it can sense object up to 120° within a meter range.

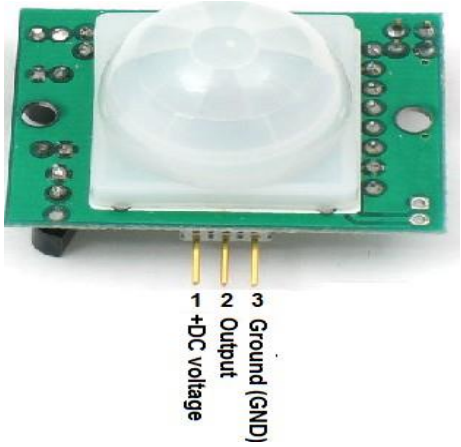

Fig. 3: PIR sensor

The pyro electric sensor is made of a crystalline material that generates a surface electric charge when exposed to heat in the form of infrared radiation. This radiation (energy) is invisible to the human eye but can be detected by electronic devices designed for such a purpose.

The actual sensor on the chip is made from natural or artificial pyro electric materials

3.3 GPS module

The GPS module L10 brings the high performance of the MTK positioning engine to the industrial standard. The L10 supports 210 PRN channels. With 66 search channels and 22 simultaneous tracking channels, it acquires and tracks satellites in the shortest time even at indoor signal level. This versatile, stand-alone receiver combines an extensive array of features with flexible connectivity options. Their ease of integration results in fast time-to-market in a wide range of automotive, consumer and industrial applications.

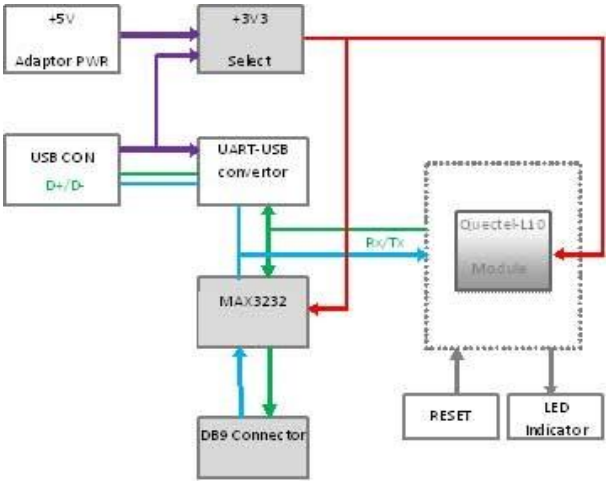

Fig. 4: GPS module

3.4 Web camera

A webcam is a video camera that streams its image in real time to or through a computer to a computer network. When "captured" by the computer, the video stream may be saved, viewed or sent on to other networks via systems such as the internet, and emailed as an attachment. When sent to a remote location, the video stream may be saved, viewed or on sent there. Unlike an IP camera (which connects using Ethernet or Wi-Fi), a webcam is generally connected by a USB cable, or similar cable, or built into the computer Hardware, such as laptops. In this project, web camera is used for live streaming and capture the image if any obstacle is detected and sends the information to the station through email.

Fig. 5: Web camera

3.5 Raspberry Pi3

A Raspberry Pi is a credit card-sized computer originally designed for education, inspired by the 1981 BBC Micro. Creator Eben Upton's goal was to create a low-cost device that

would improve programming skills and hardware understanding at the pre-university level. But thanks to its small size and accessible price, it was quickly adopted by tinkerers, makers, and electronics enthusiasts for projects that require more than a basic microcontroller (such as Arduino devices). The Raspberry Pi is slower than a modern laptop or desktop but is still a complete Linux computer and can provide all the expected abilities that imply, at a low power consumption level.

Fig. 6: Raspberry Pi3

The Raspberry Pi is open hardware, with the exception of the primary chip on the Raspberry Pi, the Broadcom SoC(System on Chip), which runs many of the main components of the board-CPU, Graphics, memory, the USB controller, etc. Many of the projects made with a Raspberry Pi are open and well-documented as well and are things you can build and modify our self.

4. CONCLUSION

Based on the Railway trail defense structure scheme, the camera in added and live monitoring is shown all the way. The camera captures all the railway path and the object detected and appear it on the screen for which the locomotive pilot will be view on. It preventing many accidents which happen on the railway track day by day. The system is based on IOT and manual stop. If the object detected, the train engine is to turn off by the locomotive pilot. The GPS used to locate where the train stop.

5. REFERENCES

[1] Amit Garg, Prakriti Naswa and PR Shula, “Case Study: Konkan Railway Corporation Limited,” Indian Institute of Management, Ahmedabad, pp. 1-57, 2012.

[2] Shashi Deshetti, “Indian Railway accident statistics-Percentage of accidents by type 2009-2014," FACTLY Data journalism portal, 22 March 2015.

[3] Apurva Singh, Aishwarya Jain and Nanditha Gajanur, ”Solar Powered Railway Track Monitoring System,” International conference in control, automation and system, 13th Oct 2015.

[4] H. C. Cho, J. Knowles, M. S. Fadali, and K. S. Lee, “Fault detection and isolation of induction motors using recurrent neural networks and dynamic Bayesian modelling,” IEEE Trans. Control Syst. Technol., vol. 18, no. 2, pp. 430–437, Mar. 2010.

[5] Ramavath Swetha, P.V. Prasad Reddy, ”Railway Track Crack Detection Autonomous Vehicle” ISSN, vol. 4, Issue 2015.

[6] P.Navaraja, ”Crack Detection System for Railway Track by Using Ultrasonic and PIR Sensor” IJAIC- 2014.

[7] S. Sawadisavi, J. Edwards, E. Resend, J. Hart, C.Barkan, and N.Ahuja, “Development of a machine vision system for inspection of railroad track,” in Proc. Amer. Railway Eng. Maintenance Way Assoc. Annu. 2012.

