INTERNATIONAL JOURNAL OF ADVANCE RESEARCH, IDEAS AND INNOVATIONS IN TECHNOLOGY

ISSN: 2454-132X
Impact factor: 4.295
(Volume 5, Issue 2)
Available online at: www.ijariit.com

BOT kitchen

Shaifali Phogat
phogatshaifali4@gmail.com
SRM Institute of Science and Technology, Chennai, Tamil Nadu

Pranav Kapur
pranavkapur_pa@srmuniv.edu.in
SRM Institute of Science and Technology, Chennai, Tamil Nadu

Dr. M. Uma Devi
umadevi.mu@ktr.srmuniv.ac.in
SRM Institute of Science and Technology, Chennai, Tamil Nadu

ABSTRACT

Nowadays everyone is concerned with how to make life easier and IoT is one such field which makes peoples life easy and less hectic. The kitchen is an integral part of a humans life. People go to the kitchen on a regular routine to make food for themselves, making food is a tedious job and managing it is more of a headache. So our aim is to reduce the risks as well as reduce the headache of managing the kitchen by introducing BOT KITCHEN, which in itself will be efficient enough to make cooking food easier. The application of this product is that it would manage kitchen inventory using RFID. Another important application is that it would manage dustbin by identifying the waste that is whether it is biodegradable or non-biodegradable.

Keywords—*IOT, RFID*

1. INTRODUCTION

Kitchen involves an area of the home and provides a lot of scope for the Internet of things. Bot Kitchen technology is the future for residential as well as large scale related technology which can be designed to deliver and distribute a number of services inside and outside the kitchen via networked devices in which all the different applications and the idea behind them are integrated and interconnected. These smart devices have the potential to share information with each other given the permanent availability to access the broadband internet connection. Hence, BOT Kitchen Technology has become part of IoT (Internet of Things). In fact, according to a recent survey conducted by a firm Next Market Insights in October 2014,24% of those who cook for themselves or others use a tablet or smartphone "all the time" in the kitchen to help them find information about food or to help with cooking itself. Another 34% use this technology on a semi-frequent basis. But app and mobile devices in the kitchen is just the beginning. The application of smart technology will not just help consumers help track inventory but also become better cooks. A growing number of physical objects are being connected to the Internet at an unprecedented rate realizing the idea of the Internet of Things (IoT). BOT Kitchen Cabinet is an innovative appliance that incorporates interactive services. It is an embedded system which consists of load sensors, Radio-frequency identification (RFID) reader and tags to provide complete awareness about ingredients and availability information for better kitchen management. The features of the cabinet are inventory management of grocery items, automatic shopping list preparation, item identification and tracking. Working in the kitchen has a lot of things attached to it that needs to be taken care of like garbage disposal, inventory of items such as pulses, flour and all the daily need products. Starting with the garbage disposal we've come up with this idea where the garbage will be sorted out into its respective bins or category by which we mean biodegradable and non-biodegradable.

This can be done with the help of sensors which detect the items nature like if the item which needs to be disposed of is a vegetable peel, it will be sorted out into the biodegradable section of the bin and will be disposed of immediately. Similarly, the non-biodegradable waste will be sorted out with the help of sensors detecting plastic, metal anything that can't be recycled. It is very well known that non-biodegradable items release hydrogen sulphide gas on an increase in temperature which could be detected by H2S detectors. If H2S gas is released than the material would be shifted to Non-Biodegradable dustbin with the help of vacuum else it would be shifted to Biodegradable side. We very well know that even after having two different dustbins one being red (non-biodegradable) and another being green (biodegradable) at public places, people still don't care much about it. They don't think once before throwing the waste. Due to which workers working in the segregation area face a lot of health issues.

2. EASE OF USE

2.1 RFID tags for making an inventory list

It would make work very easy as using RFID tags would cut short a lot of manual work. RFID technology could be sensed using detectors and a list of the items that are required in the kitchen could be directly sent to the grocery store. No mediator is required in between. The owner would also get a copy so that even he could stay in the loop regarding for what all stuff he is paying. The grocery store can also do home delivery which will again save owners time or he could go to the grocery store and just collect his items. He wouldn't have to waste time in store by picking the required items. His things would already be picked out by the store worker.

2.2 BOT dustbin

The major issue in the kitchen is that it produces a lot of waste and people at pantry generally have only one dustbin in order to throw waste. Even after a continuous effort from the government and a great amount of publicity done regarding the advantages of the use of different dustbins for biodegradable and non-biodegradable waste, no result is being seen.

So we have come up with the idea of BOT dustbin, which would be a single dustbin connected with two different dustbins, one for biodegradable and another for non-biodegradable. Segregation would be automatically done and the government would not have to waste resources that are required for segregation. They can directly send the biodegradable waste and decomposition and non-biodegradable waste for recycling.

In this way, the amount of waste that can be treated in a day would increase many times and the health issues that are faced by workers would be completely eliminated.

3. ARCHITECTURE

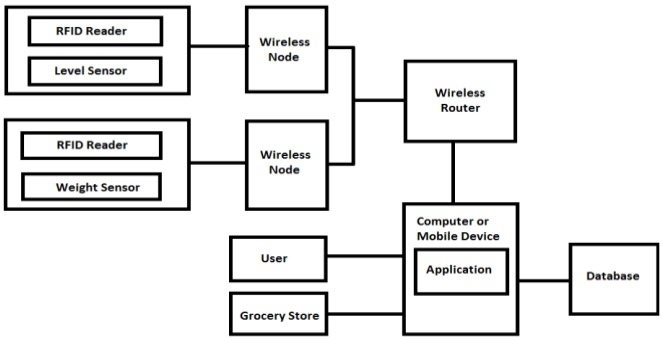

Fig. 1: Architecture of the proposed method

3.1 RFID tags for making an inventory list

This diagram explains the full working of the module inventory management which overall sums up how the inventory model of this project works. For starters we have developed and proposed a model of our bot kitchen where the inventory of food and grocery items is generated every day and the data regarding that is taken with the help of microcontroller i.e. Rasberry Pi and after collecting this data the final list or inventory for each and every product that is present in the kitchen or the product which needs to be ordered is prepared and then this list gets updated in the database for every list a copy of this data is generated which in turn is sent to the grocery store or mart so that the mart can prepare what all things which you need in the kitchen or are empty. So that when you visit the store your items are already packed and ready to be collected by you and if in case any item is not available at the store then there will be a provisional option for the Grocery store to mark it as out of stock. This feature will be developed inside an interface or an application which will be available to the user all time remotely. The inventory will be prepared with the help of RFID tags on each and every item and with the help of FSR sensors which are called Force Sensor Resistor which will help in detecting the weight of each and every item and will be simultaneously updated in the database and hence will be ordered according to the minimum average amount set for the use of that particular item on monthly basis. The algorithm for the following sequence is provided in the section of algorithms. This inventory management hence will help in reducing daily hassles faced by the people in the kitchen and ordering of grocery will be less troublesome.

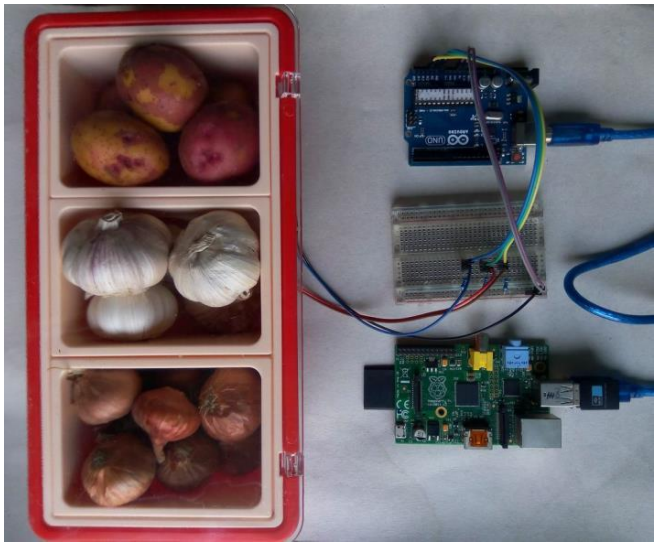

Fig. 2: RFID tags

3.2 BOT Dustbin

Architecture for BOT Dustbin is very simple. When a person throws waste in the main dustbin, it would be connected to two other dustbins, one for biodegradable waste and another for non-biodegradable waste. The main dustbin would be divided in the stack. When one waste is thrown into it the bottom stack would be closed when an addition waste is thrown it would be collected in last but one stack. When the item present in the last stack gets treated, the opening to the last stack would open and the item present in the last but one stack would come down to the last stack. The bottom of the last stack would have an aluminium foil to increase temperature and keeping it between 40 degrees and 60 degree Celsius.

Fig. 3: BOT dustbin

Case1: When the waste is biodegradable

If the waste present in the last stack is biodegradable and when the temperature is increased by aluminium foil, this substance would not release any hydrogen sulphide gas. Hence it would be transferred to Biodegradable dustbin with the help of vacuum.

Case2: When the waste is non-biodegradable

If the waste present in the last stack is non-biodegradable and when the temperature is increased by aluminium foil, this substance would release hydrogen sulphide gas. This gas would be detected by hydrogen sulphide gas detector.

This would result in the opening of dustbin which is marked as non-biodegradable and with the help of vacuum this material would be shifted to it. In this way, the waste would be segregated on its own and can be collected by municipal authorities very efficiently.

4. ALGORITHM

//Ai-1 Weight output of i-1th check.
//Ai Weight output of ith check. //B represents the set of existing tags
//Bn will showcase the number of tags that were scanned in the current scan. //Cd Threshold. END ELSE
//sometimes no action is supposed to be performed // Error can be caused due to hand pressure ELSE END IF
END ELSE Item Weight = 0
Departed Item = A - (AA) // Depart of an existing item ELSE

END IF
Item Weight = A - A Incoming Item = B - (BB)
//A New item has been arrived IF(A > A) THEN IF((A - A) Cd) THEN

- **The requirement of a family in a time period:** Weight variation can help to find out the amount of item used in one particular day, this thing is logged in the database. Wqty-quantity of item used per day, Eqty- required consumption of the particular item in the required time period
- **Automatic Shopping List Preparation:** A threshold limit could we set for each item and as soon as the quantity of the product gets less than the threshold limit, it would be added to the required list of items. This list would be sent to the grocery store and then when the owner goes to store he could pick it up.

5. FUTURE WORK

Gas possess a great amount of risk sometimes old people /Kids leave the gas on, gas is leaking, it is not burning but it is on. So we propose an idea in which a force sensor would be fixed on the top of the gas outlet. When a container would be kept on the gas outlet the force sensor would sense it and the gas would automatically switch on and as soon as the container is taken away the gas would automatically switch off. With this, the risk of leaving the gas on would be eliminated. This would help to make the kitchen more smart and effective.

6. REFERENCES

[1] Banerjee, xA., Venkata Subramanian, x K.K., x Mukherjee, xT., Gupta, S., " ensuring Safety, Security, and Sustainability of Mission-Critical Cyber-Physical Systems", Proceedings of the IEEE, Volume: 100, Issue: 1, October 2011.

[2] Buckman, A., Mayfield S, M. Beck, B. M. "What is a Smart Building?", Smart and Sustainable Built Environment, Vol. 3, Iss 2 pp. 92 – 109, 2014.

[3] Wang, Z., Wang, L., Dounis, A. I., Yang, R., "Multi-agent control system with information fusion based comfort model for smart buildings" Applied Energy, Volume 99, pp. 247-254, 2012.

[4] M. Sadiku, S. Musa, O. Momoh, "Cloud Computing: Opportunities and Challenges", Potentials, IEEE (Volume:33, Issue: 1), February 2014.

[5] Tao F., Cheng Y., Xu L., Zhang L., Li B., "CCI-CMfg: Cloud Computing and Internet of things based Cloud Manufacturing Service System", IEEE Transactions on Industrial Informatics, (Volume: 10, Issue: 2), February 2014.

[6] D. Miorandi, S. Sicari, F. De Pellegrini, and I. Chlamtac, "Internet of Things: Vision, applications and research challenges"Ad Hoc Networks vol. 10, no. 7, pp. 1497–1516, 2012.

[7] Palattella, M., Accettura, N., Vilajosana, X., Watteyne, T., Grieco, L.A., Boggia, G., Dohler, M., "Standardized Protocol Stack for the Internet of (Important) Things", Communications Surveys & Tutorials, IEEE (Volume:15 , Issue: 3), December 2012.

[8] Morvaj, B., Lugaric, L., Kranjcar, S., "Demonstrating smart buildings and smart grid features in a smart energy city", 3rd International Youth Conference on Energetics (IYCE), Proceedings of 2011.

[9] Eun-Kyu Lee, Peter Chu, and Rajit Gadh, "Fine-Grained Access to Smart Building Energy Resources", IEEE Internet Computing, 2013.

[10] Jiong J., J. Gubbi, Slaven M., and Palaniswami M., "An Information Framework for Creating a Smart City Through Internet of Things", IEEE Internet of Things Journal, VOL. 1, NO. 2, April 2014.

[11] Tao F., Zuo Y., Li D. X., and Zhang L., "IoT-Based Intelligent Perception and Access of Manufacturing Resource Toward Cloud Manufacturing", IEEE transactions on industrial informatics, vol. 10, no. 2, February 2014.

[12] Abdullahi A., "Privacy-aware IoT Cloud Survivability for Future Connected Home Ecosystem", IEEE/ACS 11th International Conference on Computer Systems and Applications (AICCSA), 2014.

