INTERNATIONAL JOURNAL OF ADVANCE RESEARCH, IDEAS AND INNOVATIONS IN TECHNOLOGY

ISSN: 2454-132X
Impact factor: 4.295
(Volume 4, Issue 3)
Available online at:www.ijariit.com

Automatic control of temperature and moisture of room cooler using Arduino

Pratik Bhoyar
pratik.bhoyar5@gmail.com
AISSMS Institute of Information Technology, Pune, Maharashtra

Kishor Rathod
kishorrathod1992@gmail.com
AISSMS Institute of Information Technology, Pune, Maharashtra

Prashnat Tagare
pratikbhoyar@rocketamail.com
AISSMS Institute of Information Technology, Pune, Maharashtra

ABSTRACT

The paper is based on temperature based automatic control of the cooling fan. LM-35 is used for sensing the room temperature. The circuit automatically senses the temperature and sends the signal to the Arduino. The range of LM-35 is 0-100◦ C. Electronic temperature controlled relays are used for an operation of the submersible pump. For the controlling purpose, Arduino microcontroller is used. The temperature that is sensed is compared with the program which decides the gate pulse for triac. Fan speed is changed according to the duty cycle of triac. Temperature values are visible on display. This project also involves the automation of submersible pump by using moisture sensor. It throws light on how water can be saved using this method.

Keywords: *Arduino nano, Opto-coupler, BC547 and temperature control*

1. INTRODUCTION

In hot and arid regions in our country, people tackle excessive heat by use of room cooler. In these areas, during summers there is an issue of water shortage. Also, the power consumption done by cooler is much more. Previously, level sensors and timer circuits have been used to detect water level and to stop the submersible pump. But due to their manual operations, these circuits were hectic to use.

This project throws light on the challenges faced by the previous uses and modifies the circuit by automating it. These can be done with the help of various sensors. The water wasted during full-time operation can be saved by switching the motor by using moisture sensor. This method solves the issue of water shortage. Also by automating the cooler fan, we can provide the sufficient speed at the required temperature. This is achieved by controlling the ac motor of the fan.

All the sensors and circuits are interfaced with arduino for purpose of comparison and control. The project is carried out sensing the room temperature and adjusting the fan speed accordingly. The moisture sensor works on the principle of conduction and trips the relay circuit to stop the submersible pump.

2. METHODOLOGY

Fan speed control circuit:

Arduino is at the heart of the circuit as it controls all functions. LM35 is a precision integrated circuit whose output voltage is linearly proportional to Celsius temperature. It is rated to operate over a range of -55℃ - 150℃. It has +10.0 mV/Celsius linear scale factor.

Temperature sensor LM35 senses the temperature and converts it into an electrical signal, which is then given to the microcontroller. As the Arduino has inbuilt ADC; it converts the analog voltage signal into the digital signal with the help of this ADC.

Thus we obtain the original temperature sensed by the LM35 sensor. We have set a program for the adjustment in fan speed. This program is burnt into the microcontroller with the help of Arduino software.
The speed is then compared with the speed range set in the program.
In this particular program, we have set three ranges for speed. These are

- 15-25℃ (low speed)
- 25-35℃ (medium speed)
- 35 and above (high speed)

We have not considered temperatures below 15℃ as they are not practically available in the area where people use coolers.
After comparison signal is given to the optocoupler IC. Most commonly used is an opto coupler MOC3023 an LED

diac type combination. This IC is interfaced with a microcontroller and internal LED is connected in series with IC, which glows to indicate logic high pulse from the microcontroller so that we can know that current is flowing through the internal LED of the opto IC.

When logic high is given current flows through LED from pin1to pin2. So in this process LED light falls on the diac causing 6&4 pins to close. During each half cycle, current flows through gate, series resistor and through opto diac for main thyristor/triac to trigger for the load to operate.

The time for which the high and low pulse is to be given to the internal led can be varied by varying the delay in the program. By varying the time of the pulses we can change the gate current and hence the triggering of triac can be changed. Due to change in duty cycle, triac remains off for some time and on for some time thus changing the speed of the motor connected to it. High wattage resistor is used in the circuit to deal with power loss during switching.

Operation of submersible pump:

The moisture sensor circuit is very simple. Here we have used a moisture detector probe to sense the moisture in the net and a BC547 NPN transistor is used to trigger the relay. The moisture detector probe is homemade and built using two connecting wires, the relay is used as an indication of moisture detection.

Working on this circuit is understandable and clear. Here we have connected one wire of probe to directly 5V from the power supply and the other probe is connected to the base of transistor and resistor is used for adjusting the sensitivity of the circuit.

When there is no moisture on the net, the probes does not allow any voltage to pass to the base of the transistor, and hence the relay does not trip. The motor connected to the relay hence remains on since the net is still not wet. When both probes come in contact with the moisture or water then the probes get shorted because water is a good conductor of current.

When probes get shorted, Vcc gets applied to the base of the transistor and hence current flows through it. This operates the relay circuit and hence it trips. The motor connected to the relay turns off as a result.

Also, a provision has been provided if there is no water in the tank.

We can manually turn off the switch connected to the submersible pump and switch off the motor. In this case, only the fan will continue its operation while the motor will not.

3. BLOCK DIAGRAM

Figure 1 shows the block diagram.

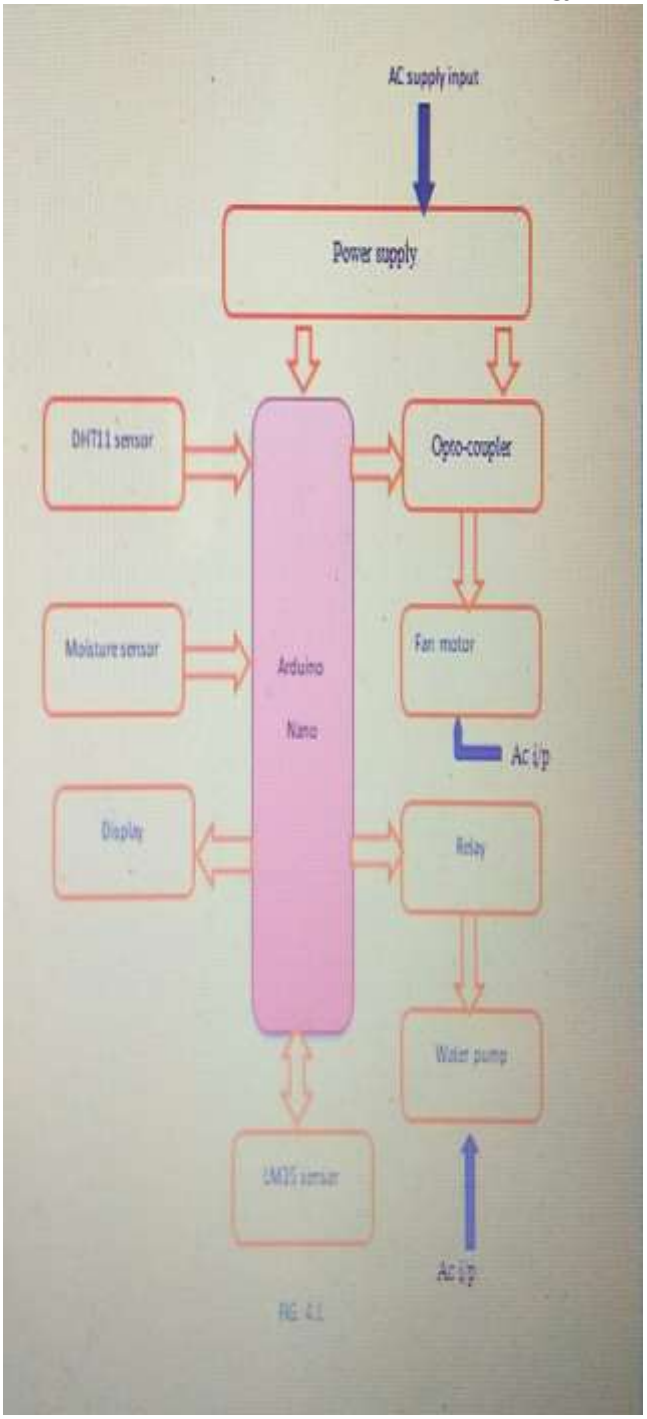

Fig. 1: Block Diagram

1. **Power supply:**

- Required for operation of the microcontroller.
- Rated output- 5V DC
- LM 7805 voltage regulator is used.
- Diode rating-1N4001 reverse voltage capacity-1000V
- C=2200 µ

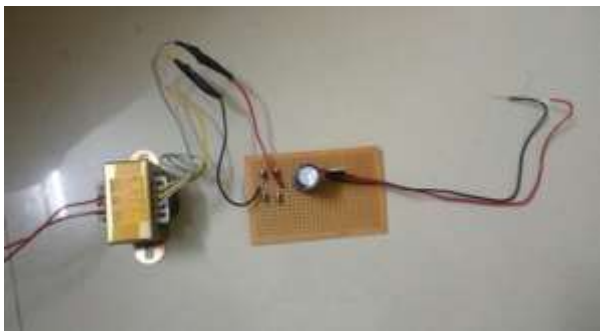

2. Microcontroller arduino Nano:

- Used for interfacing sensor and relay.
- Used as a comparator for comparing set and available value.
- Operating voltage- 5V
- Input voltage range-6-20V
- Digital I/O pins-14
- Analog input pins-8
- DC current per I/O pin-40 Ma

3. BC547:

- Bi-Polar NPN Transistor.
- DC Current Gain (h_{FE}) is 800 maximum.
- Continuous Collector current (I_C) is 100Ma.
- Emitter Base Voltage (V_{BE}) is 6V.
- Base Current (I_B) is 5mA maximum.

BC547 is an NPN bi-polar junction transistor. A transistor stands for transfer of resistance, is commonly used to amplify current. A small current at its base controls a larger current at collector & emitter terminals.

BC547 is mainly used for amplification and switching purposes. It has a maximum current gain of 800. Its equivalent transistors are BC548 and BC549.

4. Relay:

- It is a sensing device acting as a switch to control operation of the submersible motor.
- It operates when the room temperature reaches the set temperature.
- Rating- 5V DC-220V AC

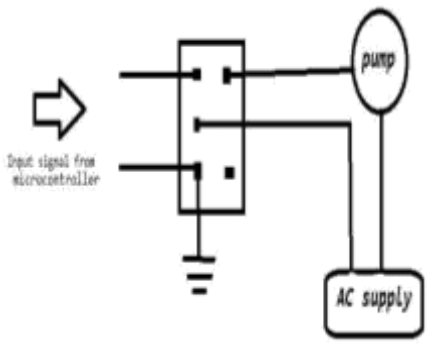

5. Opto coupler:

- Peak blocking voltage of 400V
- Isolation voltage of 4.17KV
- Non zero crossing triac operation
- Temperature range -40°C to 85°C.
- LED trigger current is 5mA.

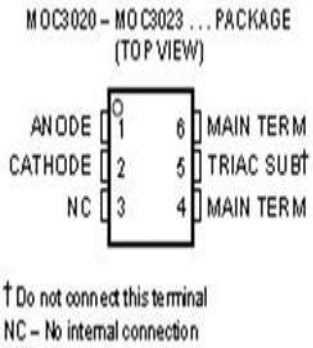

6. TRIAC BT156:

- Repetitive peak off-state voltage: 600V
- Non-repetitive peak on-state current: 25A
- RMS on-state current: 4A
- Gate trigger current: 5mA
- Holding current: 1.2mA
- Gate trigger voltage: 0.7V

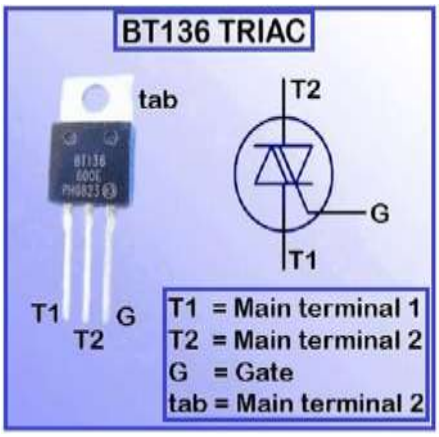

4. EXPERIMENTAL ANALYSIS

The fan speed is changed by changing the duty cycle of the triac.

We found out that the duty cycle and the speed of the fan are dependent on each other. By setting various duty cycles for specific temperature we observed the following results.

$$\text{Duty cycle} = T_{ON} / (T_{ON} + T_{OFF})$$

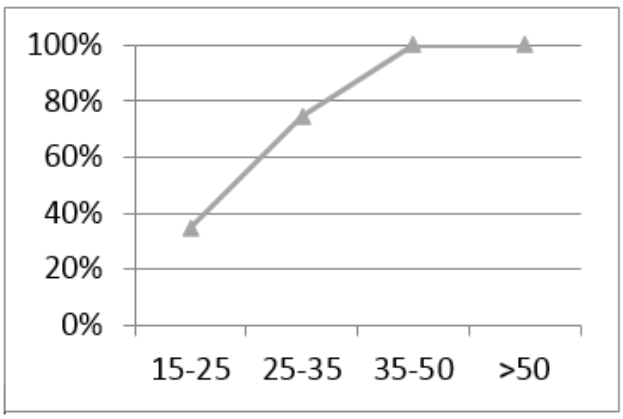

Temperature in ℃	Duty cycle in %	Speed
15-25	35%	LOW
25-35	75%	MEDIUM
>35	100%	HIGH

5. CONCLUSION

This project elaborates the design and control of fan speed with a change in room temperature. It also throws light on automation of submersible pump. The system designed can perform well for any temperature change and can be classified as automatic control.

By applying this in the daily household system the room cooler will become more power efficient and prevent unnecessary use of water. There is still room for some future development.

6. REFERENCES

[1] Khaled. M., Nouby, M. Gazhaly, G. T. Abd-el-jaber, "Design a Remote Control System for: Submersible Pumps Based on GSM-SMS", American journal of engineering and technology research, Vol.16, No.2, 2016.

[2] Ayokunle, Samuel, Tobiloba, Ayoade Felix, Hope. E, "Design and implementation of an automatic irrigation system based on monitoring soil moisture", a journal of electrical engineering, 2015.

[3] Asst. Professor, Dept. of EEE, Kumar guru College of Technology, Coimbatore:"Automation submergible pumps and design using the theory of innovation and problem-solving technology", International journal of advanced engineering technology, March 2016.

