INTERNATIONAL JOURNAL OF ADVANCE RESEARCH, IDEAS AND INNOVATIONS IN TECHNOLOGY

ISSN: 2454-132X
Impact factor: 4.295
(Volume 4, Issue 3)
Available online at: www.ijariit.com

Design, development and experimental studies of downdraft gasifier

Sinhal Samirkumar Narendrabhai
sinhalsamir@gmail.com
Chhotubhai Gopalbhai Patel Institute of Technology, Surat, Gujarat

Mohammad Husain Shaikh
mohammad.shaikh@utu.ac.in
Chhotubhai Gopalbhai Patel Institute of Technology, Surat, Gujarat

Patel Sachin
sachin.patel@utu.ac.in
Chhotubhai Gopalbhai Patel Institute of Technology, Surat, Gujarat

ABSTRACT

Fossil fuels are the major source of energy but the quantities of these are limited and use of these causes greenhouse effect by net addition of CO_2 to earth atmosphere and also there is an issue of scarcity of fossil fuels (i.e. Petrol, LPG, and CNG) in the world. Especially in developing country like India, fossil fuel price is also very high. So, current objective is to find a substitute for a fossil fuel. Before existence of fossil fuel, biomass was the only source of energy which was understood by mankind and utilized as a fuel. Gasification of biomass allows overcoming these issues. Energy extraction from biomass with considering environmental aspect is a challenge. Gasification is thermo chemical process which converts biomass into synthesis gas ("syngas"). Syngas mainly comprises of Hydrogen (H_2) and Carbon Monoxide (CO), which has capability to further burnout and releases energy. Syngas can be used for power production, heating application and liquid fuel production. There are several reactors available for gasification process; present study is focused on downdraft gasifier reactors. It is focused on production of syngas and effect of various parameters like equivalence ratio, moisture content of biomass wood used on composition of syngas. Therefore, intention is to produce a substitute gaseous fuel syngas from biomass by using fixed bed downdraft gasifier.

Keywords: *Downdraft Gasifier, Biomass Pallets, Gasification, Substitute of Fossil Fuel, Syn-Gas.*

1. INTRODUCTION

The increasing cost along with fast depleting conventional energy sources with serious emissions has been a matter of serious concern worldwide. The unprecedented increase in these emissions enhances the global warming, which in turn responsible for global climate change. Under the business-as-usual scenario, greenhouse gas emissions are expected to double over the next 50 years.[1] There are various forms of renewable energy sources. Biomass is one of the important sources of renewable energy. India has huge volume of potential for renewable energy sources. Biomass can be formed from living species like plants and animals. Biomass does not take millions of year to develop unlike fossil fuels. Every year, vast amount of biomass grow through photosynthesis by absorbing CO_2 from atmosphere. When it burns, it releases the CO_2 that the plants had absorbed from the atmosphere recently. Thus, the burning of biomass does not make any net addition to the earth's carbon dioxide levels. The use of biomass (wood) to provide heat is as old as mankind, but by directly burning the wood we only utilize about one-third of its energy. Two-thirds is lost into the environment with the smoke.[2]

Gasification is the thermo chemical phenomenon in which chemical transformation occurs along with the conversion of energy. In a sense, gasification is a form of incomplete combustion. Heat from the burning solid fuel creates gases which are unable to burn completely, due to insufficient amounts of oxygen from the available supply of air. Gasification is the method of collecting the smoke and its combustible components. Biomass gasification is one of the several technologies with a very high potential for rural power generation applications in addition to its inherent advantage of neutral emissions of CO_2.[1] **Ayhan Demirbas** reported that direct combustion is the old way of using biomass. Combustion is responsible for over 97% of the world's bio-energy production. Four major methods for conversion of organic wastes to synthetic fuels are hydrogenation, Pyrolysis, gasification and bioconversion. By 2050 biomass could provide nearly 38% of the world's direct fuel use and 17% of the world's electricity. Co-firing biomass with coal helps reduce the total emissions per unit energy produced also reduce greenhouse gas emissions. Co-firing biomass with coal has the capability to reduce both NOx and

SOx levels, also reduce fuel costs, minimize waste and reduce soil and water pollution.[3] The conversion technologies for utilizing biomass can be separated into four basic categories: direct combustion processes, thermo chemical processes, biochemical processes and agro-chemical processes. There has been an increasing interest for thermo chemical conversion of biomass and urban wastes for upgrading the energy in terms of more easily handled fuels, namely gases, liquids, and charcoal in the past decade. The thermo chemical conversion of biomass (pyrolysis, gasification, combustion) is one of the promising routes among the renewable energy options of future energy. It is a unique renewable form of energy with many ecological advantages. In the thermo chemical conversion technologies, biomass gasification has attracted the highest interest as it offers higher efficiencies compared to combustion and pyrolysis. The resulting gas, known as producer gas, is a mixture of carbon monoxide, hydrogen, methane, carbon dioxide and nitrogen. The producer gas is more versatile in its use than the original solid biomass. It is burnt to produce process heat and steam or used in gas turbines to produce electricity.[4]

Compared to other gasification technologies, the downdraft gasifier is the most sustainable option for decentralized heat and power generation because the producer gas obtained from it contains very low content of tar and particulates. The performance of the gasification process depends on the types of feedstock and its characteristics such as moisture content, composition (ultimate analysis), and equivalence ratio and so on. Inappropriate selection of these parameters may lead to excessive presence of tar and soot in the producer gas. These unwanted materials in the producer gas may disturb the continuous and smooth operation of gas engines.[5]

Several scientists approached downdraft gasification technology using wood as a feedstock and studied the various parameters that affect the producer gas quality including moisture content of wood chips, oxidizer (air) flow rate, chip size, location of air inlet nozzle and reduction zone length.[6]

P. Raman [7] has reported that types of reactors used in the downdraft gasifier are either throat-less design or throated design. Tar content in the raw gas generated from a downdraft gasifier, is reported as 2000 mg/Nm^3. While same in the clean gas is reported as 10 to 50 mg/Nm^3. Preferable tar level in the clean gas are less than 25 mg/Nm^3 for running internal combustion engines. Specific gasification rate is inversely proportional to the cross-section area of the reactor. Increase in gasification rate can provide high quality gas but will act as a barrier to the flow of biomass. Increased insulation will improve the gas quality by increasing the reactor temperature but it will add to the complexity in terms of fabrication and cost. High reactor temperature will increase the gas quality but add to the problem related to ash melting. A vibrating grate ash removal system was used to minimize the charcoal yield into the ash pit. The upward motion of the raw gas used for separation of the particulate matter carried away by the gas.

Theoretical and experimental studies have been carried out to analyse the behaviour of gasifiers. Gasifier with three stage of air supply designed and built with height from the reactor top to the grate centre is 0.85m and the height of feed material in the gasifier is kept about 0.63m. The gasifier is built of carbon steel with an internal coating of refractory material which is surrounded by 15 cm of insulating blanket for safety and minimizing heat losses. .The mass flow of biomass is in the range of 5-10 kg/h, and the amount of fuel can be varied by a frequency converter. It is suggested that for biomass feeding rate was 7.5 kg/h and ER was 0.25-0.27, the product gas of the downdraft fixed bed attains a good condition with LHV about 5400 kJ/m^3 and cold gas efficiency about 65%. An increase in equivalence ratio led to higher temperature which in turn resulted in lower tar yield which was only 0.52 g/Nm^3 at ER = 0.32.[8]

Nikhil Ashok Ingle [2] reported that Overall gasification efficiency dependent on the specific gasifier used, fuel type, fuel moisture content and fuel geometry. Fuel gas from air blown gasifier has low calorific value (around 5MJ/m^3) and fuel gas from oxygen fed gasifier has a medium calorific value (10 – 20 MJ/m^3). To hold the biomass the hopper used made up of MS material with 650 mm OD and 500mm ID. The reactor, a cone-shaped cylinder made up of SS 304 material in which the actual reactions take place. The feed material is held on grate also made of SS 304. K type thermocouples and Hot wire anemometer is used to measure temperature and velocities respectively. Gas analyser is used to measure the constituents of the gas. Feed stocks used are wood pellets of sizes 100-150 mm, then of size 30-50 mm, and agricultural waste of 70-80 mm. CO and H_2 content are highest in the gas from wood pieces of size 30-50 mm with coconut shells added to it. Agricultural waste briquette has lowest content of CO and H_2. CO content is highest at air velocity of 2.9 m/s for wood material. Air velocity of 3.88 m/s is optimum for biomass material. Wood pieces of size 30-50 mm are best suitable as a feedstock than of the size greater than that. **Pratik N. Sheth** [4] developed Imbert type downdraft gasifier for gasification of wood waste, having height of 1.1m and diameter at Pyrolysis zone 310mm, at reduction zone 150mm, height of reduction zone 100mm, height of oxidation zone 53mm, height of Pyrolysis zone depends upon biomass loading. To prevent bridging lever operated movable great is used. Six pair of chromel-alumel thermocouples placed at different height for measurement of temperature. Height of thermocouple from grate 46, 237, 328, 428mm. 25 ml diesel is poured to aid the combustion of biomass. Flow-rate of air is measured by rota-meter. Sesame wood is used as biomass inlet. Air flow rate varied from 1.8-3.4 m^3/hr, moisture content 4 to 12%. Biomass consumption rate 1.0 to 3.6 kg/hr. It is found that at an equivalence ratio of 0.17 the calorific value is the least at 4.5 MJ/Nm^3. With a small increase in the equivalence ratio to 0.205, the calorific value reaches to a maximum of 6.34 MJ/Nm^3 and then follows the decreasing trend. So, a present study is to design 20 kW capacity downdraft gasifier to produce combustible gas from wood waste (biomass pallets made from sawdust) which can be further used in a burner, boiler or to run a generator.

2. DESIGN OF EXPERIMENTAL SETUP

A small prototype laboratory scale downdraft gasifier is designed for experimentation purpose. All parts of Gasifier reactors are designed based on specific gasification rate of downdraft category of gasifier. Specific gasification rate (SGR) of Downdraft gasifier is **1920-2640 m^3/m^2-hr**. [9]

2.1 Important Parameter in Design

Following parameters must be understood first before starting design of Downdraft Gasifier.

Equivalence Ratio (ER)

ER is defined as the ratio of oxygen supplied per kg feedstock to the stoichiometric requirement. ER fixes the amount of air supplied for gasification. A value of 0.4 ER is theoretical assumed as optimum. As the ER value approaches 1.0, the combustion reaction is predominant and as it tends to zero, pyrolysis is the major process. The gasifier designs are based on the above mentioned optimum ER. For a given biomass consumption rate, the volumetric rate of air can be calculated from ER value.

Specific Gasification Rate (SGR)

SGR is the volumetric flow rate of gas per unit area based on throat diameter, the gas volume being measured at the standard conditions. The recommended SGR value falls in the range of **1920-2640 m^3/m^2-hr**.[9]

Relative Tube Capacity (RTC)

RTC is the mass flow rate of biomass per unit area based on the diameter of the tube.[10] The recommended RTC value falls in **250-300 m^3/m^2-hr**.[9]

Specific Solid Flow Rate (SSR)

SSR is the mass flow of fuel measured at the throat. It is a derived parameter since it can be obtained from SGR. As one kg of wood approximately gives **2.4 m^3** of gas, SSR can be related to SGR as SGR/2.4.[9]

2.2 Design Procedure

Some Parameter is required to decided first for the design purpose which is as follows,

The capacity of gasifier: Capacity of the gasifier is decided first and that is 20 kW thermal output power (P_0). Whole gasifier design procedure is based upon its capacity.

Syngas Yield (Y): As per literature [9] 1 kg wood will yield 2.4 m^3 of syngas.

High Calorific Value (HCV) of Syngas: High Calorific Value of produced syngas from Subabul wood, which mostly available as fire wood as well fast growing tree, is 4258 KJ / m^3 [10].

So, Required Syngas generation rate for **20 kW** output thermal power is,

$$Q_g = \frac{P_0}{HCV}$$

Q_g = 16.90 m^3/ hr ≈ 17 m^3/ hr

Air Flow Rate Calculation:

For the calculation of air flow rate, Ultimate analysis of wood is required. Table 1 shows Ultimate Analysis of Wood-chips.[11]

Table 1 Ultimate Analysis of Wood-chips

Constituent	Wet basis (% by weight)
Carbon (C)	48.6
Hydrogen (H)	6.5
Nitrogen (N)	7.26
Sulphur (S)	0.05
Oxygen (O)	40
Moisture (H_2O)	6.57
Ash	3.90

Optimum equivalence ratio is considered as 0.4 from the literature review and whole designed is based upon 0.4 equivalence ratio.

Stoichiometric air requirement calculation is shown below, where a sample of 100 kg wood chips is considered.

$C + O_2 \rightarrow CO_2$

12 + 32 → 44 (Molar Basis)

48.6 129.6 178.2 (For 100 kg wood)

$H_2 + ½O_2 \rightarrow H_2O$

2.016 + 16 → 18 (Molar Basis)

6.5 51.587 58.0357 (For 100 kg wood)

$S + O_2 \rightarrow SO_2$

32 + 32 → 64 (Molar Basis)

0.05 0.05 0.1 (For 100 kg wood)

Total O_2 required for complete combustion of 100kg wood chips,

[O2] th = [O2] C + [O2] H + [O2]S - [O2] fuel

[O2] th = 129.6 + 51.587 + 0.05 - 40

[O2] th = 141.237 kg per 100 kg of wood

Therefore, Total air required for complete combustion of 100 kg wood chips is,

$(m_a)_{sto}$= 614.073 kg

For wood chips, Stoichiometric air-fuel (A/F) ratio is,

$$\left(\frac{m_a}{m_f}\right)_{sto} = 6.14073$$

So, actual air-fuel (A/F) ratio at optimum equivalence ratio (which is assumed 0.4) is,

$$\left(\frac{m_a}{m_f}\right)_{act} = \left(\frac{m_a}{m_f}\right)_{sto} \times \emptyset_{opt}$$

$$\left(\frac{m_a}{m_f}\right)_{act} = 6.14073 \times 0.4 = 2.45629$$

Feedstock requirement for 17 m^3/hr gas generation rate

$$\dot{m}_f = \frac{Q_g}{Y}$$

$$\mathbf{\dot{m}_f = 7.083\ kg/hr \approx 7\ kg/hr}$$

The actual mass flow rate of air required for the designed condition,

$$(\dot{m}_a)_{act} = \left(\frac{m_a}{m_f}\right)_{act} \times \dot{m}_f$$

$$\mathbf{(\dot{m}_a)_{act} = 17.1934\ kg/hr}$$

Low-pressure air blower is used to supply air to the gasifier, for such low-pressure ratio air is treated as an incompressible fluid. Considering Normal temperature and the pressure condition volumetric air flow rate is calculated.

So, actual volumetric air flow rate,

$$Q_a = \frac{(m_a)_{act} \times R \times T}{P}$$

$$\mathbf{Q_a = 17.40\ m^3/hr}$$

2.3 Throat Design

Throat diameter of the gasifier is designed from specific gasification rate (SGR) value. SGR value of downdraft gasifier falls in between **1920-2640 Nm^3/m^2-hr**. SGR value for downdraft gasifier is taken as SGR = 2000 Nm^3/m^2-hr.

From the definition of Specific Gasification Rate,

$$SGR = \frac{Q_g}{A_{th}}$$

Where, A_{th} = Area at Throat
Q_g = 17 Nm^3/hr and SGR = 2000 Nm^3/m^2.hr

A_{th} = 0.007 m^2

So, Diameter of throat will be, **D_{th} = 10.40 cm**

For flow stability of biomass inside gasifier, Ratio of throat height and throat diameter taken is 0.5 [9]

$$\frac{H_{th}}{D_{th}} = 0.5$$

So, Height of throat will be, **H_{th} = 6 cm**

2.4 Reduction Zone Height (H_r)

The relation between reduction zone height and diameter of the throat is used to calculate reduction zone height below air inlet[9],

$$\frac{H_r}{D_t} = 2.0$$

$$\mathbf{H_r = 20.80 \approx 21\ cm}$$

2.5 Fuel Storage Tube Diameter (d_{tube})

For calculation of diameter of fuel storage tube, Relative Capacity of Tube (RCT) is used. Which is 250 kg / hr.m^2 for Downdraft Gasifier.[9]

$$RCT = \frac{\dot{m}_f}{A_{tube}}$$

Where, $\dot{m}_f$The = actual mass flow rate of biomass in kg/hr
A_{tube} = Area of the tube for storage of biomass in m^2

So, the diameter of storage tube,
$$\mathbf{d_{tube} = 18.88\ cm \approx 19\ cm}$$

2.6 The height of Storage Tube

The bulk density of wood chips 150-300 kg/m^3. Let's take 200 kg/m^3.
So, calculating storage of woodchips for 1 hr operation of gasifier,

Volume require to store 7 kg of wood chips = 0.035 m^3

To calculate height of storage tube,

$$0.035 = \pi \times r^2 \times h$$
Where,
r = radius of fuel storage tube in, m
h = height of fuel storage tube in, m

$$\boldsymbol{h = 1.23\ meter}$$

2.7 Height of Convergent and Divergent Portion

To prevent bridging of biomass in gasifier in convergent-divergent section 60^0 inclinations is given; from that inclination and reduction zone height below air inlet is must be more than 22 cm, keeping this in mind calculated height of convergent and divergent portion is 9.1 cm both. For simplicity in design and material availability and for ease in manufacturing some dimensions are changed accordingly that is shown in final design.

2.8 Temperature Measuring Instrument

To measure the temperature of different zones of gasifier K type thermocouples are used. Gasifier zones are varying in vertical direction. In vertical total 4 holes are drilled in the setup for temperature measurement, resistance probe of 10 cm length and 3 mm diameter is purchased.

2.9 Final Design

Figure 1 shows final design with all dimensions designed in ANSYS for manufacturing and also showing air inlet pipe position and gas outlet pipe position. All dimensions are in mm.

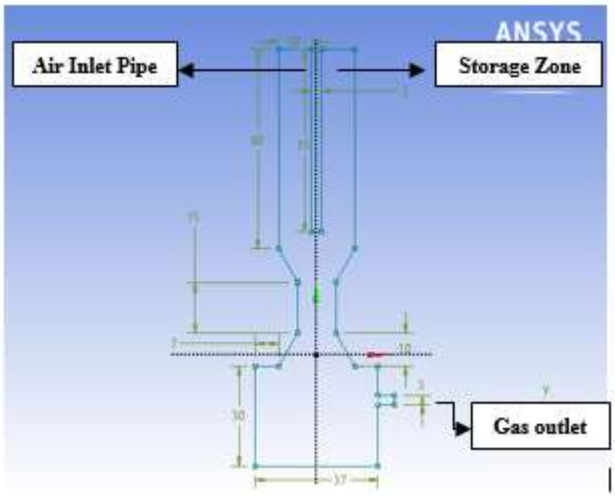

Figure 1 Complete Design with All Dimensions in mm

2.10 Parts Designed in ANSYS

Figure 2 shows bottom part of Gasifier with Gas Outlet Pipe and Flange on the Top.

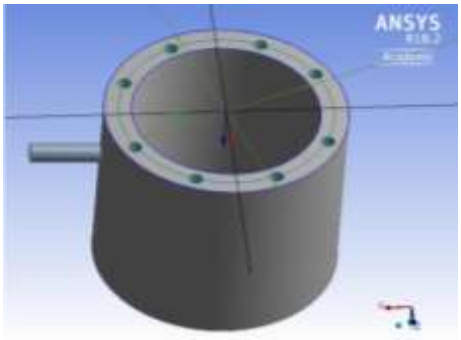

Figure 2 Bottom part of Gasifier

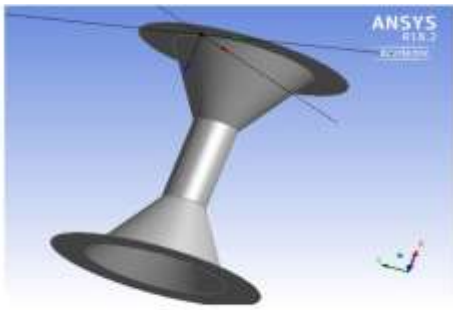

Figure 3 Convergent-Divergent Section with Throat

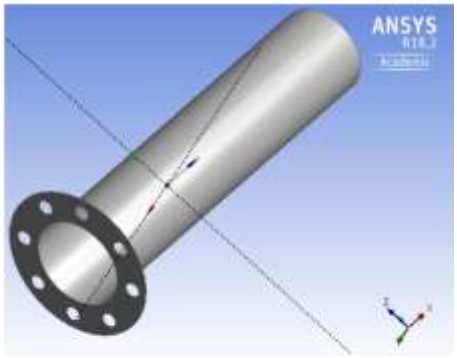

Figure 4 Fuel Storage Tube

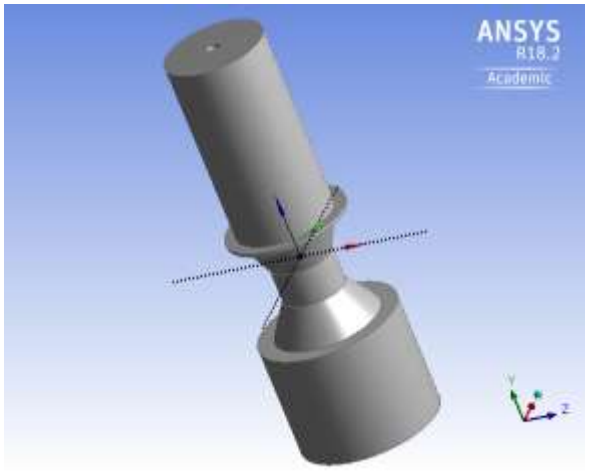

Figure 5 Final Assembled 3-D model of Gasifier

2.11 Experimental Setup

Experimental set up consists of gasifier reactor and air supply system. Gasifier reactor is provided holes at different levels to insert thermocouple. There is an air supply system and main component of air supply system are blower, pipe line, orifice meter, manometer and variac.

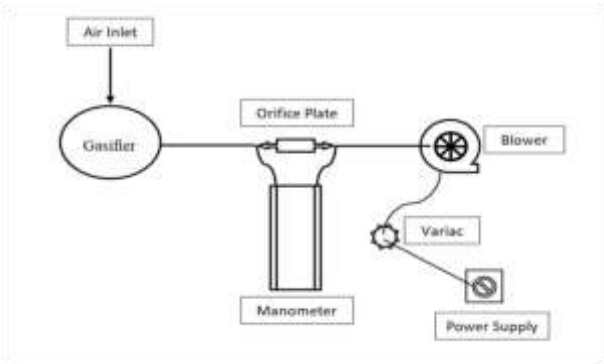

Figure 6 Outline of Experimental Setup

Air is sucked from the gasifier by Blower and air flow rate is measured by orifice-plate & manometer arrangement. Variac is used to control air-flow rate through gasifier. Outline of gasifier set-up is shown in Figure 6.

Final assembly of the experimental setup of downdraft gasifier is as shown in figure 7 with connected blower and manometer.

Figure 7 Final Experimental Setup

2.12 Experimentation Procedure

Detailed experimental procedure steps are explained as follows:

- Prepare all the required instruments for the set up i.e. Thermocouples, manometer, variac for speed variation of the blower.
- Fill the gasifier with biomass fuel (woodchips or Biomass Pallets) up to upper air inlet pipe and close the top door by putting a gasket between them and conform that no leakage of air or gas.
- Start blower and allow higher air flow through complete pipe lines and gasifier reactor for purging. After continuing up to 5 minutes stop purging.
- Fill water in bottom part of the gasifier for the collection of ash particles.
- Just below middle air inlet of the reactor, a small pipe is placed internally in the reactor for initial ignition.
- For starting of gasifier paper is put in the ignition pipe, the blower is started and then igniting the paper will suck hot air into the gasifier and after doing 2-3 times we can see combustion is started in the gasifier.
- Conforming combustion is started, ignition port is closed.
- The required flow rate of air is fixed by varying speed of blower through variac, which is calculated from manometer deflection.
- Check after 5-10 minute whether the combustible gas is produced or not by igniting syn gas at the outlet of the blower with a gas torch.
- If the continuous flame is observed, take the gas samples from the other gas outlet point for further gas-analysis.
- After completion of experimentation we have to leave gasifier on running for 3-4 hours for complete cool-down of gasifier or we can spray water into combustion zone through ignition port but it is little more dangerous because sprayed water on hot combustion port convert water in hot steam instantly and it can burn your skin so, intensive care should be taken first.

3. OBSERVATION AND RESULTS

Experimentation on Designed laboratory scale downdraft gasifier is done by using various feed stocks.
The first experiment was done by using wood bark as a feed stock as shown in figure 13. Due to its low density cannot able to get good quality of syn gas for a sustainable flame.

The second experiment done with wooden blocks as shown in figure 14, size of the wooden block is 5 cm × 5 cm × 2 cm ±2 cm. It could not give sufficient results for a sustainable flame at the outlet of the burner.

So, one more experiment done with wooden sawdust biomass pallets as shown in figure 15, which resulting into a clean syn gas at outlet of blower with sustainable flame. Sustainable flame can be seen in figure 18, it shows clean burning of syn gas with very low tar content into it.

Figure 8 Wooden Bark available at Saw Mill

Figure 9 Waste Wooden Blocks

Figure 10 Biomass Saw Dust pallets

Figure 11 Syn Gas at outlet of blower

Figure 12 Igniting Syn-Gas with Gas Torch

Figure 13 Sustained Flame of Burning Syn Gas

4. CONCLUSION

Sustainable flame of burning Syn Gas at outlet of the blower produced with wooden waste saw-dust (called Biomass Pallets) validates preset design of the downdraft gasifier, with minimal tar content into produced gas that can be directly used into gas burner, boiler, generator etc to produce cleaner heat energy with less harmful effect to earth atmosphere. Best quality of gas produced at range of equivalence ratio 0.4 to 0.5 with using biomass pallets as a feed stock.

5. REFERENCES

[1] A. K. Sharma, "Experimental study on 75 kWth downdraft (biomass) gasifier system," Renew. Energy, vol. 34, no. 7, pp. 1726–1733, 2009.
[2] N. A. Ingle and S. S. Lakade, "Design and Development of Downdraft Gasifier to Generate Producer Gas," Energy Procedia, vol. 90, no. December 2015, pp. 423–431, 2015.
[3] A. Demirbas, "Combustion characteristics of different biomass fuels," Prog. Energy Combust. Sci., vol. 30, no. 2, pp. 219–230, 2004.
[4] P. N. Sheth and B. V. Babu, "Experimental studies on producer gas generation from wood waste in a downdraft biomass gasifier," Bioresour. Technol., vol. 100, no. 12, pp. 3127–3133, 2009.
[5] V. ChristusJeya Singh, S. Joseph Sekhar, and K. Thyagarajan, "Performance studies on downdraft gasifier with biomass energy sources available in remote villages," Am. J. Appl. Sci., vol. 11, no. 4, pp. 611–622, 2014.
[6] I. Janajreh and M. Al Shrah, "Numerical and experimental investigation of downdraft gasification of wood chips," Energy Convers. Manag., vol. 65, pp. 783–792, 2013.
[7] P. Raman, N. K. Ram, and R. Gupta, "A dual fired downdraft gasifier system to produce cleaner gas for power generation: Design, development and performance analysis," Energy, vol. 54, pp. 302–314, 2013.
[8] F. Guo, Y. Dong, L. Dong, and C. Guo, "Effect of design and operating parameters on the gasification process of biomass in a downdraft fixed bed: An experimental study," Int. J. Hydrogen Energy, vol. 39, no. 11, pp. 5625–5633, 2014.
[9] J. Venselaar, "Design Rules for Down Draft Wood Gasifiers: a Short Review," pp. 1–24, 1986.
[10] M. H. Shaikh, "Design, Development and Performance Evaluation of Entrained Bed Gasifier," M.tec Thesis,SVNIT,Surat, 2012.
[11] V. Shrivastava, "Design and development of downdraft gasifier for operating CI engine on dual fuel mode," no. 210, 2012.

