INTERNATIONAL JOURNAL OF ADVANCE RESEARCH, IDEAS AND INNOVATIONS IN TECHNOLOGY

ISSN: 2454-132X
Impact factor: 4.295
(Volume 4, Issue 3)
Available online at: www.ijariit.com

Design and implementation of smart black box system for gathering the safety information in vehicles

Dimple R
dimplerelekar19@gmail.com
P. E. S. College of Engineering, Mandya, Karnataka

B S Nanda
nandapes123@gmail.com
P. E. S. College of Engineering, Mandya, Karnataka

ABSTRACT

According to World Health Organization, over a million people die every year due to vehicle accidents. To respond to this situation, the black box concept is used as the first step to solve the problem. . In order to overcome from this problem, we are trying to implement the concept of "black box" in this paper. This paper describes real-time data collection while driving a vehicle and to check the driving behaviour and a car status, and this data is useful to investigate the accident and to investigate the accident. New communication technologies are integrated into modern automobiles, giving the better assistance for the injured people in traffic accidents. Recent studies show how communication capabilities should be supported by artificial intelligence systems capable of automating many decisions to be taken from emergency services. This reduces the security risk for the severity and rescue time of the accident. The accident is indicated by the use of sensors and the location and intensity of the accident can be sent via SMS via GSM. The car black box is a tool used to record engine temperature, interruption, speed, vehicle driving, and information about accurate location of the vehicle. The outputs of these parameters are displayed in LCD. The data recorder stores the values of all sensors communicated with the controller. Then this information is transmitted via a wireless network. This collected information will be sent to the police server, ambulance via the GSM network. The system considers the most appropriate variables (such as sensors) that represent the severity of the accident. The GPS tracking system in this mobile helps detect vehicle during the accident and enables authorities to expand immediate emergency medical service.

Keywords: *Microcontroller, Android, LCD, Sensor.*

1. INTRODUCTION

A vehicle accident is one of the most important issues around the world. According to the World Health Organization, over one million people die every year due to transportation-related accidents. Although various vehicle manufacturers have taken several steps to improve the safety of the vehicle, the problem remains for the above reasons. Due to the delay in medical aid, death rates are high, causing economic and social burdens for people involved. Like aircraft data recorders on a plane, "black box" technology now plays a major role in motor vehicle accident investigation.

The block box is defined as an electronic device, which is used to record and store information in particular. We used the same concept in implementing a black box in the car for help. Here the black box is used to record and store vehicle acceleration, temperature, pressure, interruption values in real time and store the vehicle's driving history. We can analyze and monitor the driving conditions of the vehicle and the accident. We used analog to digital converter (ADC) to collect analog values collected by the sensors and convert them into a digital value to feed into the microcontroller.

The main objective of the project is made zero accident level in real time all over the globe and if accidents occur to recover fast very short time, increases the probability of survival of the injured, and reduces the injury severity. And automatically deployed the actions required, thereby reducing the time to assist the inured person.

1.1 System Model

The system overview which can be implemented is as follows,

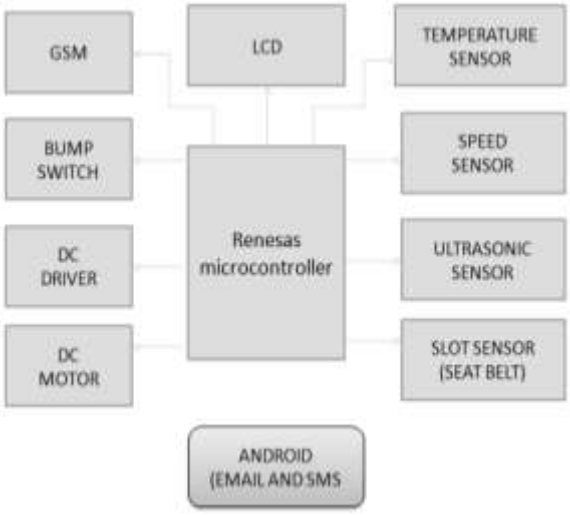

Fig 1 shows the overview of the system

Block diagram in our proposed system is shown in Fig1. Black box contains the Renesas 64 pin Microcontroller, LCD, DC motor, DC driver, Ultrasonic sensor, Temperature sensor, Accelometric sensor, Slot sensor, GSM, and bumps switch. It detects the engine temperature, obstacle presences, acceleration & seat belt check. The outputs of these parameters are displayed on the LCD. This collected information's along are send to the police server, ambulance through the GSM. GPS tracking system developed in this paper helps to track the vehicle in case of an accident and enables authorities to extend immediate emergency medical service.

When an accident occurs the microcontroller gets activated and starts collecting the information such as temperature, the presence of obstacle, acceleration and set belt check respectively from the sensors. This collected information is displayed on the LCD screen and is sent to the police server through the mail and an SMS to the emergency medical service through GSM. The GPS in the mobile communication helps to know the exact location of the accident spot. By using this information police can easily know the accident spot and they get the correct proofs of the accident to provide justice.

1.2 Hardware Description and Design

64 Pin Renesas Microcontroller

Features

- General-purpose register: 8 bits × 32 registers (8 bits × 8 registers × 4 banks)
- ROM: 512 KB, RAM: 32 KB, Data flash memory: 8 KB
- On-chip high-speed on-chip oscillator
- On-chip single-power-supply flash memory (with the prohibition of block erase/writing function)
- On-chip debug function
- Ports → Total 11 ports with 58 Input / Output Pins

LCD Display

A liquid crystal display (LCD) is a flat panel display, electronic visual display, based on Liquid Crystal Technology. It is a thin, flat display device made up of any number of color or monochrome pixels arrayed in front of a light source or reflector. In this paper, we are using 16×2 LCD. It receives the collected information's which are stored in the microcontroller and displays these messages. It uses very small amounts of electric power.

Temperature Sensor

If this value goes abnormal, the engine temperature is the key parameter of the control unit when some unnecessary gases get out of vehicles due to unnecessary combustion. In this paper, to obtain the vehicle engine temperature, we used LM35 as a temperature sensor. It constantly senses engine temperatures and is given to the microcontroller. It converts temperature value into electrical signals. It is rated to operate over a -55 to +150°C temperature range.

Ultrasonic sensor

The ultrasonic sensor is to measure the minimum distance in front of the vehicle Ultrasonic sensors work on a principle similar to radar or sonar which evaluate attributes of a target by interpreting the echoes from radio or sound waves respectively. Ultrasonic sensors generate high-frequency sound waves and evaluate the echo which is received back by the sensor.

Accelerometer (speed) sensor

The accelerometer is to find the angle of tilt of a car during any accident or in some improper road ways. This accelerometer value as an angle of tilt is fed to microcontroller unit each time. Here the threshold range is 130 degree in a clockwise direction and 190 degrees in an anticlockwise direction, if car tilts less than 130 degrees and tilts greater than 190 degrees then the car would be in danger.

GSM Module

GSM module is used in ensuring the safety of the vehicle. It is programmed in such a way that whenever the accident has detected the location of the vehicle is sent to registered telephone number through GSM & all the sent details can be used to locate the vehicle using Google map.

Slot Sensor

This sensor is used to give the information about whether the seat belt is weared or not. This is an Optoelectronic device. It can act as a opt isolator. The IR diode in the left portion keeps emitting IR rays. The opt transistor keeps sensing these rays. The Centre portion is a slot into which a thin obstacle can pass for ex., an RFID card. Once an obstacle is detected the input to the optical transistor is blocked.

DC Motor

A DC motor is a device that converts direct current (electrical energy) into mechanical energy. Two dc motors are used for driving the wheels connected to the robot. L293d is a dc motor driver used for driving dc motors. 200rpm center shaft economy series DC motor is high-quality low-cost dc geared motor. It has steel gears and pinions to ensure longer life and better wear and tear properties. The gears are fixed on hardened steel spindles polished to a mirror finish. The output shaft rotates in a plastic bushing. The whole assembly is covered with a plastic ring. Gearbox is sealed and lubricated

with lithium grease and requires no maintenance. The motor is screwed to the gear box from inside. Although motor gives 200 rpm at 12v motor runs smoothly from 4 v to 12v and gives a wide range of rpm, and torque.

Bumper Switch

It is a type of touch sensor for the VEX. Due to its size and construction, it is better suited for tasks such as wall detection. Whenever the sensor is pressed in, it will return a value of 1. Whenever it is not pressed in, it will return a value of 0. Touch sensors are used to perform a variety of tasks, from solving a maze using wall detection to controlling the movements of your robot's arm attachment.

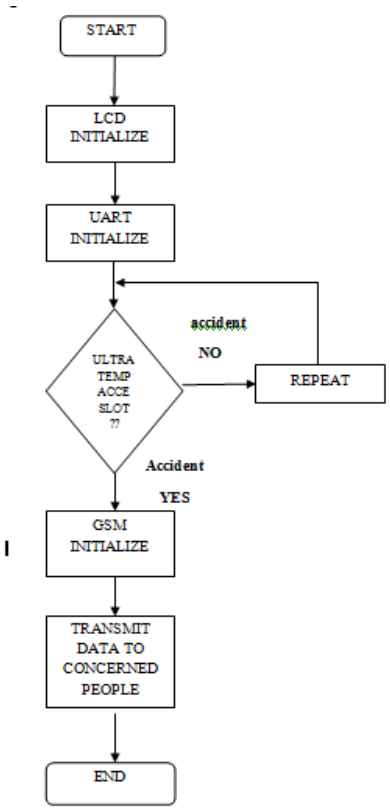

Fig 2: Flow chart of the proposed system

1.3 Experimental Results

The paper has both software and hardware implementation. The results for both are explained in this paper. As the project aims at design and development of "Design and Implementation of Smart Black box System for Gathering the Safety Information in Vehicles", the results are shown accordingly. Whenever the power is switched on, a display appears as "START" and "GSM INITIALIZED. And the vehicle starts moving.

Fig 3: System shows the start of the vehicle

If the vehicle meets with an accident a message will be displayed on LCD as "accident occurred"

Fig 4: system showing accident occurred and the vehicle stopped

The other parameters such as temperature, seat belt are continuously sensed by respective sensors and are displayed on the LCD.

Fig 5: System showing the various parameters

In case of collision occurred a message is received by a registered number from the GSM

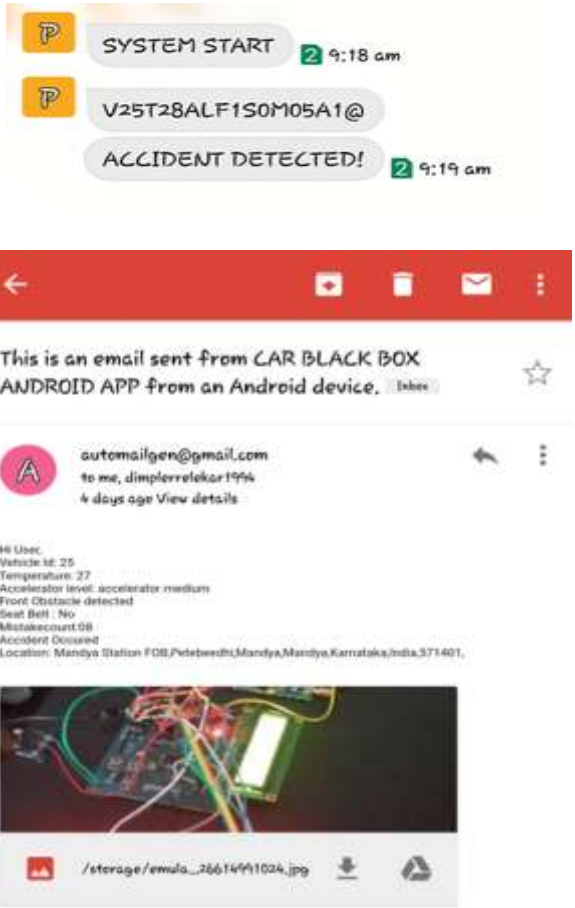

Fig 6: The messages received from GSM

The complete system of vehicle black box is as shown in fig 7

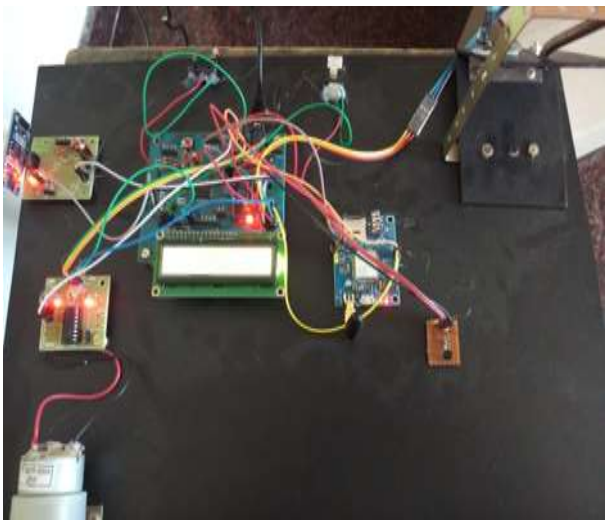

2. CONCLUSION

The proposed system makes good use of GPS and Android applications by providing safe and secure traveling to the travelers. This is done using wrong path alert mechanism. It helps to find the current location of the vehicle. Traveler's safety mechanism is also provided using temperature, ultrasonic, smoke and accelerometer sensor. As per traveler's safety concern, the proposed system also gives alert massage to authorized mobile so that authorized person also knows about their traveler's safety.

3. REFERENCES

[1] Chanjin Kang and Seo Weon Heo, Member, IEEE Hongik University, Seoul, Republic of Korea, " Intelligent Safety Information Gathering System Using a Smart Blackbox", IEEE International Conference on Consumer Electronics (ICCE), 2017.

[2] Mr. Ramchandra Patil and Mr. Shivaraj Hublikar , "Design and Implementation of Car Black Box with Collision Avoidance System using ARM", International Journal of Innovative Technology and Exploring Engineering (IJITEE) ISSN: 2278-3075, vol-4, issue-4, Aug 2014

[3] P. Ajay Kumar Reddy, P.Dileep Kumar, K. Bhaskar Reddy, E.Venkataramana , M.Chandra Sekhar Reddy, "Black box for vehicles", International Journal of Engineering Inventions ISSN: 2278-7461, www.ijeijournal.com, Vol 1, Issue 7, PP: 06-12 , October 2012.

[4] Soundarraj.V, Rajasekar.L, "Design of Car Black Box Based on the ARM", International Journal of Microsystems Technology and Its Applications (IJMA) Vol-1, No-2 January-2013.

[5] Dheeraj Pawar, Pushpak Poddar, "Car Black Box with Speed Control in Desired Areas for Collision Avoidance", Engineering, Technology & Applied Science Research, Vol. 2, No. 5, pp.281-284. dec 2012.

[6] Muhammad Ali Mazidi & Janice Gillispie Mazidi, The 8051 Microcontroller, and embedded systems, 6th edition, Pearson Education.

[7] D. L. Nguyen and M. Lee and A. Lensky, "The Design and Implementation of New Vehicle Black Box Using The OBD Information," 7th International Conference on Computing and Convergence Technology, pp.1281-1284, Dec. 2012.

[8] H. Moon, K. Kim, M. Lee and P. Kim, "A Study on the Context-Aware System for Intelligent Automobile Black Box," 27th Chinese control and decision conference (2015 CCDC), pp. 2536-2540, May 2015.

[9] Abdallah Kassem, Rabih Jabr, Ghady Salamouni, Ziad Khairallah Maalouf, "Vehicle Black Box System", Proceedings of the 2nd Annual IEEE System Conference, IEEE 2008, pp. 1-6.

