INTERNATIONAL JOURNAL OF ADVANCE RESEARCH, IDEAS AND INNOVATIONS IN TECHNOLOGY

ISSN: 2454-132X
Impact factor: 4.295
(Volume 4, Issue 3)
Available online at: www.ijariit.com

Smart Eye for Blind Person using Raspberry Pi

Hitesh Kumar
hitesh9110@gmail.com
Dayananda Sagar College of Engineering, Bengaluru, Karnataka

Mohit Kumar
mohitgolu22@gmail.com
Dayananda Sagar College of Engineering, Bengaluru, Karnataka

Kajal Bijpuria
kajalbijpuriya12@gmail.com
Dayananda Sagar College of Engineering, Bengaluru, Karnataka

Gaurav Kumar Gulathi
suryakantgulathi@gmail.com
Dayananda Sagar College of Engineering, Bengaluru, Karnataka

Chetan Umadi
chetanumadi7@gmail.com
Dayananda Sagar College of Engineering, Bengaluru, Karnataka

ABSTRACT

A camera-based label reader is used to help blind person which helps them in reading names of the label on the product. The camera captures the label image of the product which is in front of it, detects the product label image and then the image is separated using open CV library. The image label is then identified and can be heard by the blind person through voice. Earphones can be used for this, connected to the audio jack. The kit used for execution is the Raspberry PI which consists of various slots. This system also helps to find obstacle which appears in front of the blind person with the use of sensors.

Keywords: *Assistive devices, Optical Character Recognition, Text localization algorithm, and Adaboost model, IR sensor, Variable power supply.*

1. INTRODUCTION

Reading is necessary everywhere in today's world whether in the form of bank receipts, restaurant menus or reports. In 2009, according to **World Health Organization** disability survey, visually impaired people are 269 million and 45 million people are blind worldwide. In today's time, due to the development of digital cameras and computers can help blind persons to read necessity things with the help of camera-based products such as OCR. Formulating such devices can promote independent living and foster better economic and social self-dependent life.

Blind persons also find difficulty in placing the product exactly on the bar code reader to read the product. Also, they are unable to identify the obstacle such that it prevents them from falling. A single device which consists of a camera and an earphone. The camera captures the image of the product in front and the output will be given as voice through the earphone. For obstacle detection, IR transmitter and two IR receivers are used. The IR transmitter transmits the IR signals from the IR sensor and then reflected by the receiver when the obstacle is detected.

Fig 1: Products and labels

2. PROPOSED SYSTEM

The Block Diagram of the proposed system is shown in figure 1. It consists of power supply Unit, Raspberry Pi, Camera and an earphone.

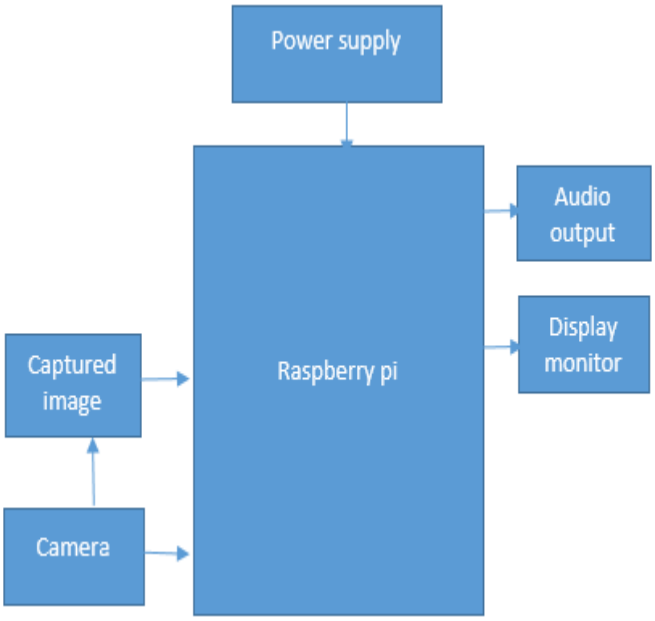

Fig 2: Detailed block diagram of the System

The block diagram consists of Raspberry Pi which consists of an ARM11 microcontroller (BCM2837), Pi cam, power supply, Flash memory, SRAM and speakers or earphone. The Pi camera is used to capture the image placed in front of the camera. The HDMI interface with the system is used to connect the raspberry pi to the monitor. SRAM is used for temporary storage and the flash memory is used to for permanent storage of the data. The BCM2837 processor is used to perform the required action on the captured image and provides audio output through the earphone.

HARDWARE REQUIREMENTS

- Raspberry Pi
- Power supply unit
- Camera
- Flash memory
- Speakers

Fig 3: The Raspberry PI Board

Raspberry PI board is shown in fig 2, is the kit which is used for the execution consists of various slots which can be interfaced with the computer, power supply, USB camera and the earphone.

The Raspberry Pi is a credit-card sized computer which can be used for many of the things, like word processing and games. Raspberry Pi is so brilliant in its ability to execute "Python" coded programs. Processor speed ranges from 700 MHz to 1.4 GHz for the Pi 3, and on-board memory ranges from 256 MB to 1 GB RAM. **Raspberry Pi 3 Model B** was released in February 2016 with a 64-bit quad-core processor and consists of on-board Wi-Fi, Bluetooth, and USB boot capabilities.

SOFTWARE REQUIREMENTS

- Operating System: Linux
- Platform: Open CV (Linux-library)

Linux Operating System:

The Linux open-source operating system which is based on UNIX is a freely distributable cross-platform operating system. It can be easily installed on laptops, PC, note books, Mobiles and tablet devices, servers, video game console, supercomputer and more.

Open CVL:

Open CV library originally developed by Intel and is an open source computer vision library. Under the license BSD (Berkeley Software Distribution) it is free for commercial and research use. The Open CV library runs on Linux, Windows, and Mac which mainly focuses on real-time image processing and is a cross-platform library.

3. WORKING PROCEDURE

The Camera which is connected to the Raspberry Pi is switched by giving a command to the ARM microcontroller. Then the Webcam captures the image of the object placed in front. After capturing the image of the object the image undergoes Optical Character Recognition Technology. The entire project is based on the Raspberry Pi. The scanned image of printed text or symbols is converted into text or information the can be understood or edited using a computer program Using OCR technology. In this project for implementing OCR technology, we are using TESSERACT library. After the processing of the image, the obtained text is converted into speech using an e-speak engine which speaks out the text through a speaker or earphone that can be connected to the audio jack of the Raspberry Pi.

METHODOLOGY:

Text and product label reading:

The image is captured with help of a camera and it can be done by OpenCV libraries.The format of the image from the camera is in RGB24 format. The size of projected capture image is 320x240 in the window. Using the camera, totally 10 frames per second can be captured.The text from the input image is identified by captured image segregated into the frame and each of this frame is converted to gray image and then into a binary image.Then Localization algorithm is used on the binary image to localize the text from the background. The output is given to Optical Character Recognition (OCR) which recognize the text and generate audio output .The architecture and component of text is shown figure.

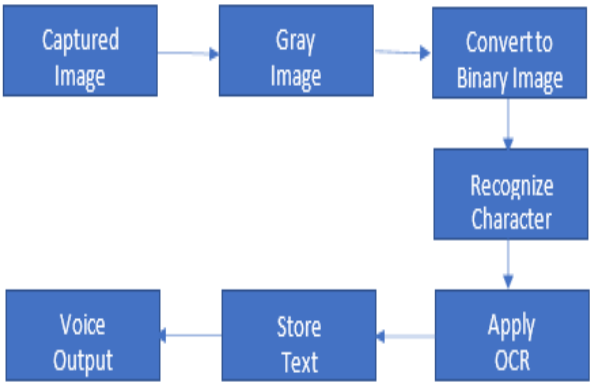

Fig 4: The block diagram of the text detection

Text Localization Algorithm:

In text localization algorithm the image is taken as the input and we find the region of interest of the required text which is confined into the rectangular region and that contains the text to be detected first the image is converted into grey followed by binary image and the model identifying the alphabet is exactly located in AdaBoost model.

Haar Cascade- Adaboost Model:

Effective machine learning training set for the text detection is an Adaboost model. The training set comprises of positive and negative samples where we can further define positive sample consisting of text image while negative sample contains images other than the text present in the input image.

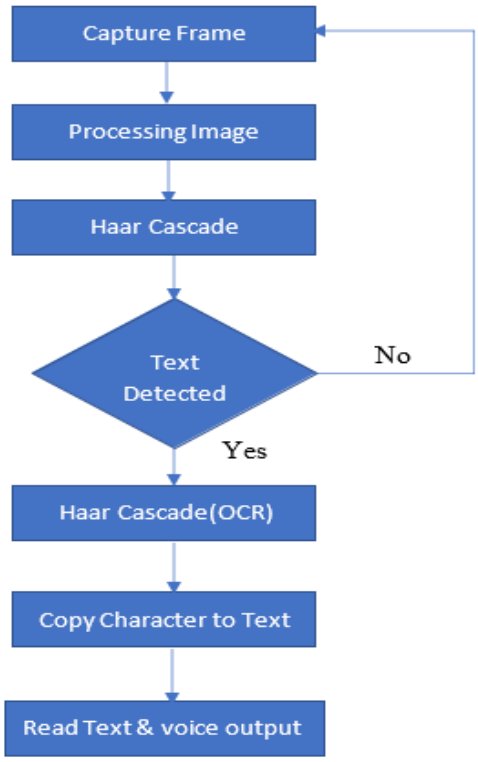

Fig 5: Flow chart of Text Detection

Haar Cascade gets input image which analyses text which is inside the ROI and matches the input text with predefined text in the training text.The one to which the range of similarity is high is then confirmed to be the character and the corresponding audio is produced.

Audio Output Using E-Speak Engine:

The mechanical or electronic conversion of imges of typewritten or printed text into machine-encoded is called Optical Character Recognition (OCR). We then get the output of Haar cascade into an out.png file which dynamically overwrites the text with every frame. The output then gets sent to the e-speak engine based on Microsoft Synthesizer Development kit and the audio output gets generated which is then received out via ear phones.

OBSTACLE DETECTION:

The Obstacle detection consists of IR Transmitter and two IR receiver . The IR transmitter sends the pulse of infra- red rays to the forward direction for detecting the Obstacle. The two IR receiver is receiver #1 which is used to detect very far object if the signal is generated high which has normal efficiency. The other receiver #2 which is used to detect near object if the signal is generated high which has less efficiency.

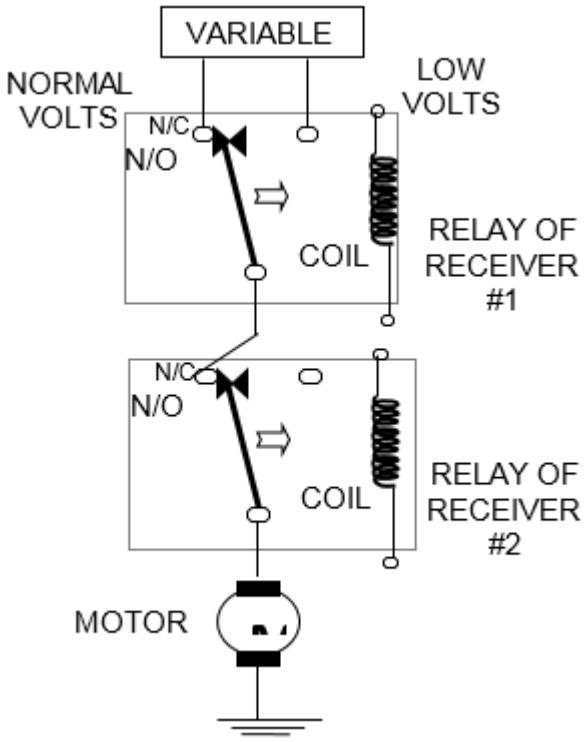

Fig 6: Block diagram depicting switching Stage arrangement

The signal generated in both receiver are energized by two relays switching action. The switching action consist of two relays each one are used for the two relays that are receiver#1 and receiver#2 both the tapping is used for variable power supply which is connected to receiver#1 to N/C pin and N/O pins and the other receiver#2 in which pole is connected to the N/C pin and its pole is connected to power supply of the line motor. All the things are controlled by the remote sensing device. The Obstacle detection module is added so that the blind person does not face difficulty.it emits IR signal from IR sensor continuously .when some Obstacle is placed in front of blind person the IR signal is detected and reflected back and this reflected signal is further detected by IR sensor which is present at the side of the emitter.

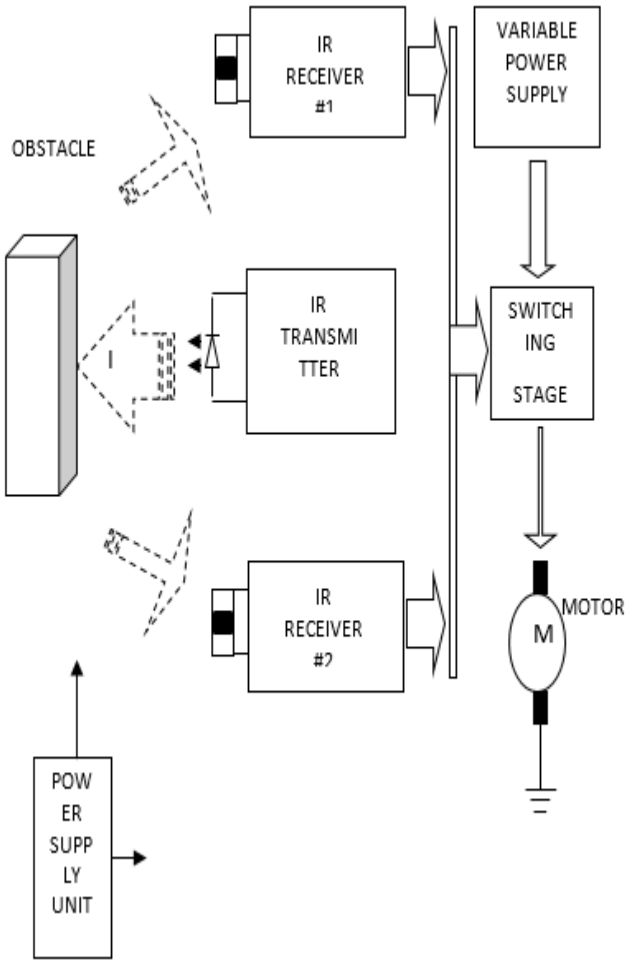

Fig 7: Block diagram of obstacle detection system

4. RESULT

We have described a prototype system to read printed text on objects which are hand held for assisting blind persons. To solve the common problem for blind users a single utility is proposed which helps a blind person in an easy manner. Above figure shows the setup of how the system connections appear. The monitor is used for invoking the program and the platform used for open CV library is the Linux.

Fig 8: Original Setup

There are two slots on the left end which consists of Memory card slot and power supply slot. The two slots on the right side consist of USB port to attach the external camera and the LAN interfacing with the laptop. The red wire indicates the earphone which is connected to the audio jack.

Fig 9: Connections on the Raspberry PI board

5. CONCLUSION

The proposed system helps blind persons to read printed text on products which appears in front of the camera through the earphone. In addition, it also helps them to detect the obstacle to prevent them from falling. It can build self-confidence and can give a better life to the blind users as they become self-dependent for day to day requirements.

6. REFERENCES

[1] Chucai Yi, Yingli Tian, Aries Arditi,'' Portable Camera-Based Assistive Text and Product Label Reading From Hand-Held Objects for Blind Persons", IEEE/ASME TRANSACTIONS ON MECHATRONICS, vol. 19, NO. 3, June 2014

[2] M. A. Faisal, Z. Aung, J. R. Williams, and A. Sanchez, "Data-stream based intrusion detection system for advanced metering infrastructure in smart grid: A feasibility study," IEEE Syst. J., vol. 9, no. 1, pp. 1–14, Jan. 2014.

[3] C. Yi and Y. Tian, "Text detection in natural scene images by stroke Gabor words," in Proc. Int. Conf. Document Anal. Recognit., 2011, pp. 177–181.

[4] A. Shahab, F. Shafait, and A. Dengel, "ICDAR 2011robust reading competition: ICDAR Robust Reading Competition Challenge 2: Reading text in scene images," in Proc. Int. Conf. Document Anal. Recognition, 2011, pp. 1491–1496.

[5] D. Dakopoulos and N. G. Bourbakis, "Wearable obstacle avoidance electronic travel aids for blind: vol. 40, no. 1, pp. 25–35, Jan. 2010.

