INTERNATIONAL JOURNAL OF ADVANCE RESEARCH, IDEAS AND INNOVATIONS IN TECHNOLOGY

ISSN: 2454-132X
Impact factor: 4.295
(Volume 4, Issue 3)
Available online at: www.ijariit.com

Study of different microstrip patch antenna and their feeding schemes

Gaganpreet Singh
gaganpreet63@yahoo.co.in
Guru Gobind Singh College of Modern Technology, Mohali, Punjab

Mukta Sharma
mukta121@gmail.com
Guru Gobind Singh College of Modern Technology, Mohali, Punjab

ABSTRACT

Today's in a modern communication system the most widely used antenna is the microstrip patch antenna which is used due to its advantages like the small size, low- cost and less weight. The patch antenna can be excited by different feeding techniques such as contacting and not- contacting. In contacting scheme, the signal is fed directly to the patch whereas in non –contacting method signal is fed by using electromagnetic field coupling. In this review paper a survey has been conducted on different types of microstrip antenna namely Patch antenna, Dipole antenna, Printed slot antenna, traveling wave antenna and feeding techniques used in Microstrip Patch Antenna (MPA). Antennas like the single band, dual band, multiband and wideband have been studied along with their parameters like gain, return loss, radiation pattern and their bandwidth.

Keywords: *Fractal geometry, Multiband antenna, Bandwidth enhancement, edge tapering, HFSS and Microstrip patch antenna.*

1. INTRODUCTION

Antennas are considered to be the largest components of integrated low-profile wireless communication systems. It is well known that the dimension of the antenna is a function of its operating wavelength, i.e. if the antenna's size is less than, it becomes inefficient because its radiation resistance, gain, and bandwidth are ruined [1]. Today's mobile communication systems demand increased bandwidth for voice and data applications. Also with most systems supporting multiple wireless standards, it is imperative to employ antennas which can cover these bands. Multiband antennas cater to these needs by radiating at specific discrete frequencies only [2]. In spite of its various attractive features like light weight, low cost, easy fabrication, conformability on a curved surface and so on, the microstrip element suffers from an inherent limitation of narrow impedance bandwidth [3].Microstrip antenna can be categorized into four types as shown in the figure below.

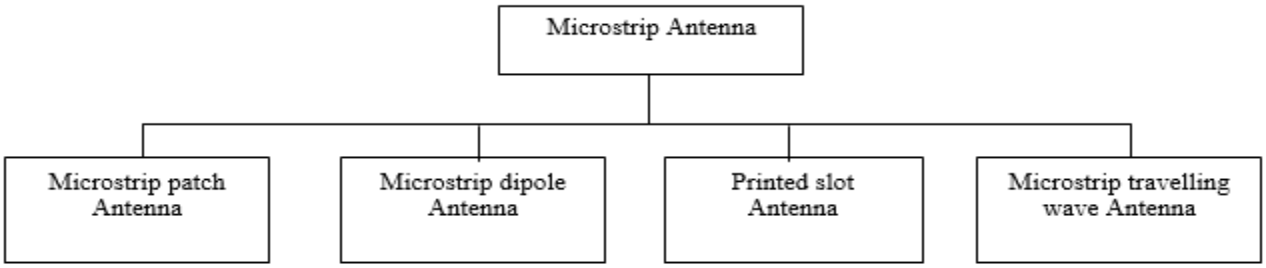

Figure1: Types of the microstrip antenna

1.1 Microstrip patch antenna

In its most basic form, a Microstrip patch antenna consists of a radiating patch on one side of a dielectric substrate which has a ground plane on the other side as shown in Figure 1. The patch is generally made of conducting material such as copper or gold and can take any possible shape.

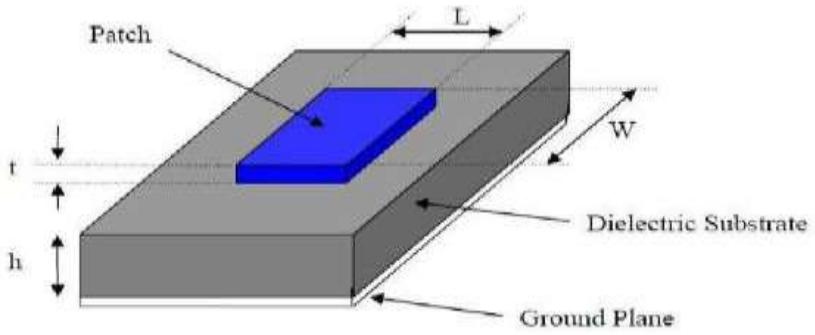

Figure 2: Structure of Microstrip Patch Antenna [3]

1.2 Microstrip dipole antenna

The microstrip dipole is a narrow microstrip conductor which is located on the real part of the substrate, which is space interrupted. Microstrip dipoles find applications in digital communication devices namely computer and the nodes for WLAN. This antenna has a small width and hence size is small so it can be used at the access point of the WLAN system. An example of microstrip dipole antenna proposed by Garg, N., & Aijaz, Z. (2012). is shown below:

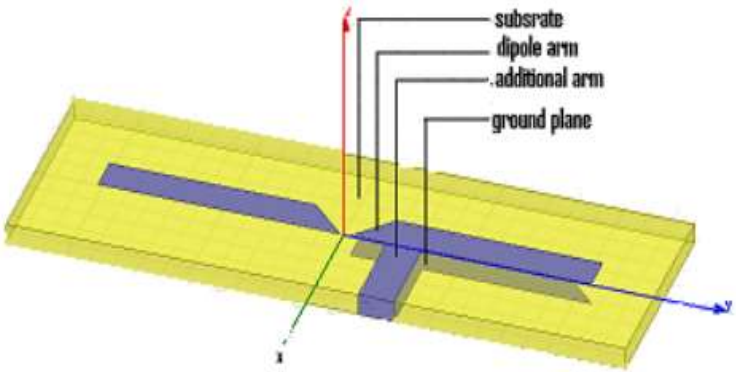

Figure 3: Microstrip Dipole Antenna with Tapered Ground Plane [3]

The above-mentioned dipole antenna has been simulated in HFSS software at the center frequency of 2.4 GHz.

1.3 Printed slot antenna

This antenna is mainly used for enhancing the bandwidth of the antenna with both unidirectional and bi-directional radiation pattern. The sensitivity of slot antenna is less as compared to the traditional antennas. The printed slot antennas are needed through a feedline which is placed opposite to the substrate and perpendicular to the axis of the slot provided on the patch [5].

1.4 Microstrip traveling wave antenna

These Microstrip traveling wave antennas are designed having a long Microstrip line with enough width to support the TE. These antennas are designed so that the main beam lying in any direction from broadside to end fire. The other end of the microwave is ended in a matched resistive load in order to avoid the standing waves of the antenna [6].

2. FEEDING TECHNIQUES

A number of feeding techniques are used to excite the microstrip antenna. Mainly the feeding techniques are categorized into two types namely contacting scheme and non-contacting techniques.

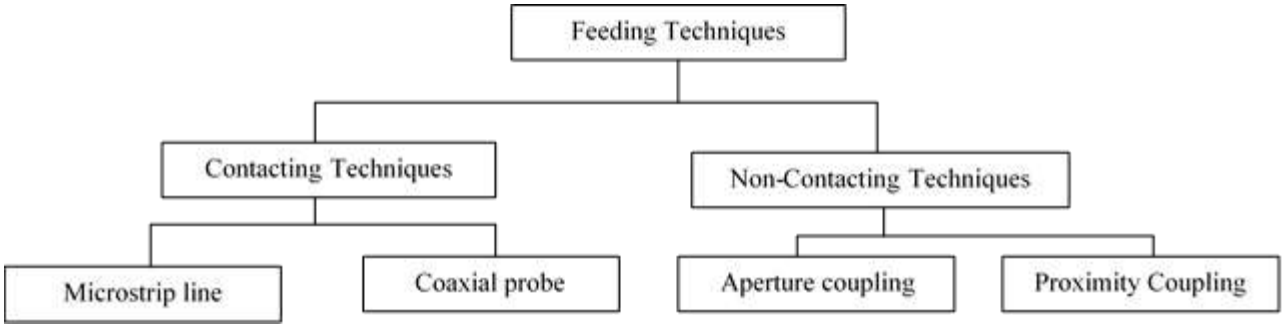

Figure 4: Classification of feeding techniques

A comparative analysis of these techniques is defined in tabular form below. The feeding methods used in MPA namely Microstrip line feed, Co-axial cable feed, Aperture Coupled and Proximity coupling are discussed along with their design, advantages, and disadvantages. Microstrip feedline directly attached to the patch, coaxial cable's inner conductor attached to the substrate and outer is attached to the patch. In Aperture coupled and approximity coupling two different dielectric constant substrates is used.

Table-1: Comparative analysis of feeding techniques used in microstrip patch antenna [7,8,9]

Feeding techniques	Description	Advantages	Disadvantages	Design
Microstrip line feed	In this type of feeding scheme, a conducting strip is directly attached to the microstrip patch. The width of the conducting patch is smaller than the size of the patch	The contacting feed can be attached to the same substrate. It is the simplest method among all the feeding techniques It is simple to design Better impedance matching	Limited bandwidth If the surface thickness increases the surface wave and spurious radiation increases. Cross polarization is high	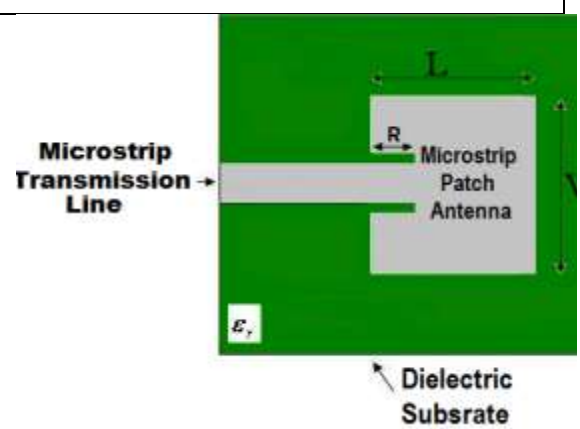
Coaxial cable	In this type of feeding technique inner conductor of the coaxial is connected to the antenna's radiation patch whereas outer conductor of the coaxial is connected to the ground surface.	Fabrication and matching is easy Spurious radiation is low The feed can be located at any place in the patch and obtained high impedance matching	Narrow bandwidth Modeling is complex	

				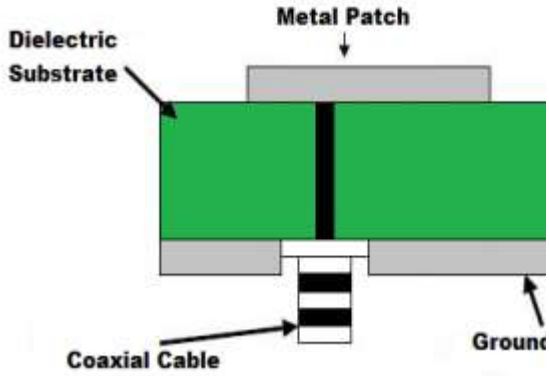
Aperture coupling	It comprises of two different material substrate that is separated by the ground plane. The energy of the microstrip line is coupled to the patch through the slot on the ground plane. the substrate used a different dielectric constant that is the upper substrate used low dielectric whereas the bottom substrate used high dielectric substrate.	Spurious radiation decreases It allows independent of feed mechanism element	It is the most difficult techniques among all	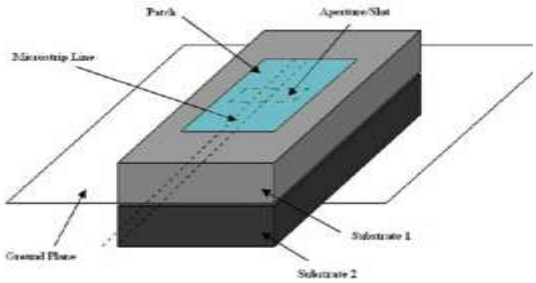

Proximity Coupling	In this scheme, two dielectric substrates are used in which the feed line is in between the substrate.	Large bandwidth Low spurious radiation	Fabrication is difficult due to the double substrate structure	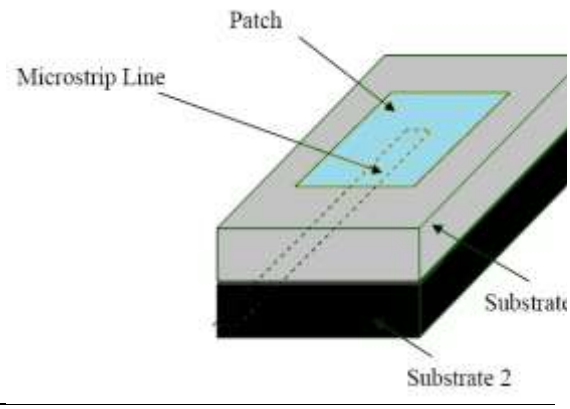

3. RELATED WORK

In this section, the techniques used by different authors for designing the microstrip patch antenna has been discussed in detail. The techniques such as L-shape used for rectangular shape patch antenna, Dual frequency band, E shape, U shape patch antenna, parasitic patch are discussed along with the advantages an outcomes came after running the antenna in HFSS and IE3D simulator are discussed.

Table-2: Comparative analysis of existing techniques to design microstrip patch antenna [10, 11]

References	Feeding technique/ Design	Simulator	advantages	Outcomes
[12]	L-shape probe feed is used for the rectangular shape patch antenna.	HFSS		Bandwidth enhancement up to 36% along with 7 dBi average gain has been obtained.
[13]	Microstrip line, dual frequency microstrip patch antenna	IE3D	Low profile Used for ultra wide bandwidth	Bandwidth up to 75% has been achieved The range of bandwidth lies from 2GHz to 35 GHz
[14]	Three parallel rectangular slots are inserted on the ground plane	HFSS	The radiation pattern is omnidirectional Better impedance Find application in multiband operation such as GPS, Wi-Fi, and WiMAX bands.	For GPS (Global Positioning System) return loss less than -10dB has been achieved. The antenna resonate at different frequencies namely (1.5, 2.6, 5.6) (1.8,3.3,5.8) GHz and (1.2,2.4, 3.5, 4.9)GHz
[15]	E shape along with U shape microstrip patch antenna using Coaxial feed has been proposed	Ansoft HFSS	Enhance gain value Increase bandwidth Decrease VSWR and Reflection coefficient	The radiation pattern at 8.7GHz, 13.4 GHz is more effective. VSWR is les
[16]	Proposed a microstrip antenna of	Ansoft HFSS	The performance of antenna increased by	Antenna resonates at two frequencies

	hexagonal shape/ Probe feed technique has been used for exciting the antenna		varying the length of the antenna	4.94 GHz and 8.02 GHz.
[17]	Parasitic patch antenna	HFSS	Increased bandwidth	The parameters like return loss, gain and bandwidth have been observed by changing the structure of patch and it is found that the results with hexagonal slot are better.
[18]	Proposed the microfluidically frequency-hopping microstrip patch resonator, probe feed	HFSS	Low cost Environment-friendly	Maximum gain up to 14.85dB, radiation efficiency if 84.6% has been obtained when the antenna resonates at 1.82 GHz.

4. CONCLUSION

In this paper, a brief overview of microstrip antenna along with their types has been described in brief. Then a comparative analysis of different feeding techniques has been discussed along with their advantages /dis-advantages and their design diagram. It is concluded that microstrip feed is a simplest feeding techniques among all others. Coaxial feed provides large bandwidth, Aperture-coupling is the most difficult technique to design and Proximity coupling has lowest spurious radiation and large bandwidth. At last, a comparative analysis of the research given by different authors has been made. It is concluded that when the slot of E and U shape has been made on patch antenna gain as well as the bandwidth of the antenna increased.

5. REFERENCES

[1] Jamaluddin, M. H., Rahim, M. K. A., Aziz, M. A., & Asrokin, A. (2005, December). Microstrip dipole antenna analysis with different width and length at 2.4 GHz. In Applied Electromagnetics, 2005. APACE 2005. Asia-Pacific Conference on (pp. 4-pp). IEEE.
[2] Garg, N., & Aijaz, Z. (2012). Design of Microstrip Dipole Antenna at Various Ground Plane. International Journal of Innovative Research in Science, Engineering and Technology, 1(2).
[3] Bod, M., Hassani, H. R., & Taheri, M. S. (2012). Compact UWB printed slot antenna with extra Bluetooth, GSM, and GPS bands. IEEE antennas and wireless propagation letters, 11, 531-534.
[4] Carver, K., & Mink, J. (1981). Microstrip antenna technology. IEEE transactions on antennas and propagation, 29(1), 2-24.
[5] Cheng, S., Hallbjorner, P., & Rydberg, A. (2008). Printed slot planar inverted cone antenna for ultrawideband applications. IEEE Antennas and Wireless Propagation Letters, 7, 18-21.
[6] Casciola, D., & Figoli, M. J. (2000). U.S. Patent No. 6,016,127. Washington, DC: U.S. Patent and Trademark Office.
[7] Mak, C. L., Luk, K. M., Lee, K. F., & Chow, Y. L. (2000). Experimental study of a microstrip patch antenna with an L-shaped probe. IEEE Transactions on Antennas and Propagation, 48(5), 777-783.
[8] Singh, I., & Tripathi, V. S. (2011). Micro strip patch antenna and its applications: a survey. Int. J. Comp. Tech. Appl, 2(5), 1595-1599.
[9] Reineix, A., & Jecko, B. (1989). Analysis of microstrip patches antennas using finite difference time domain method. IEEE Transactions on Antennas and Propagation, 37(11), 1361-1369.
[10] Singh, G., & Singh, J. (2012). Comparative Analysis of Microstrip Patch Antenna with Different Feeding Techniques. In International Conference on Recent Advances and Future Trends in Information Technology, iRAFIT.
[11] Rathod, J. M. (2010). Comparative Study of Microstrip Patch Antenna for Wireless Communication Application. International Journal of Innovation, Management and Technology, 1(2), 194.
[12] Mak, C. L., Luk, K. M., Lee, K. F., & Chow, Y. L. (2000). Experimental study of a microstrip patch antenna with an L-shaped probe. IEEE Transactions on Antennas and Propagation, 48(5), 777-783.
[13] Tiwari, A., Pandey, B., Abitha, V. K., Mishra, R., Rane, A. V., & Suryawanshi, J. (2016). Simulation of ultra-wideband co-planar boat microstrip patch antenna with IE3D software for wireless communication. Science, 1(2), 10-13.
[14] Thomas, H. (2016). Microstrip Antenna Design with Parallel Rectangular Open Slots Structure for Multiband Operation.

[15] Kumar, G. A., & Sarath, I. B. A. (2016). Design and Simulation of EU Slot Microstrip Patch Antenna for Broadband Applications. International Journal of Engineering Science, 3593.
[16] Garg, T. (2016). Hexagonal Shaped Slotted Microstrip Patch Antenna. International Journal of Engineering Science, 2172.
[17] Reddy, M. H., Joany, R. M., Reddy, M. J., Sugadev, M., & Logashanmugam, E. (2017, August). Bandwidth enhancement of microstrip patch antenna using parasitic patch. In Smart Technologies and Management for Computing, Communication, Controls, Energy and Materials (ICSTM), 2017 IEEE International Conference on (pp. 295-298). IEEE.
[18] Tang, H., & Chen, J. X. (2017). Microfluidically Frequency-Reconfigurable Microstrip Patch Antenna and Array. IEEE Access.

