INTERNATIONAL JOURNAL OF ADVANCE RESEARCH, IDEAS AND INNOVATIONS IN TECHNOLOGY

ISSN: 2454-132X
Impact factor: 4.295
(Volume3, Issue4)
Available online at www.ijariit.com

Internet of Things Based Real Time Transformer Health Monitoring System

Rahul
Department of Electrical Engineering
Gautam Buddha University, India
rahulgbtu@gmail.com

Abstract: Transformer is one of the important electrical equipment that is used in power system. Monitoring transformer for the problem before they occur can prevent faults that are costly to repair and result in a loss of electricity. The main aim of the paper is to acquire real-time data of transformer remotely over the internet falling under the category of Internet of Things (IOT). For this real-time aspect, we take one temperature sensor, one potential transformer and one current transformer for monitoring T, V, I data of the transformer and then send them to a remote location.

These three analog values are taken in multiplexing mode and connected to a programmable microcontroller of 8051 families through an ADC 0808. Then the values of all the sensors are sent sequentially as per the frequency of multiplexing of the ADC by Microcontroller.

They are then sent directly to a Wi-Fi module under TCP IP protocol to a dedicated IP that displays the data in real-time chart form in any web connected PC / Laptop for display in 3 different charts. The real-time data is also seen at the sending end LCD display interfaced with the microcontroller.

Keywords: IOT, Transformer Health Monitoring, Microcontroller, Power System.

1. INTRODUCTION

The distribution transformer is electrical equipment in power system which distributes power to the users directly, and its operating condition is important to the distribution network operators. The operation of distribution transformers underrated condition guarantees their long life. However, their life is significantly reduced if they are subjected to overloading, resulting in unexpected failures and loss of supply to a large number of customers thus effecting power system reliability. Overloading and insufficient cooling of transformers are the main causes of failure. The monitoring device systems which are presently used for monitoring distribution transformer exist some problems and deficiencies. Few of them are mentioned below.

(1) Ordinary transformer measurement system only detects a single transformer parameter, such as power, current, voltage, and phase. While some ways could detect multi-parameter, the time taking and operation parameters are too long, and testing speed is not so fast.
(2) Detection system itself is not reliable. The performance is the device itself instability, poor jamming capability, low measuring accuracy data, or even another system should is not affected.
(3) Timely detection data will not be sent to monitoring centers in time, which cannot judge distribution transformers three-phase equilibrium.
(4) The monitoring system can monitor the operational state or guard against stealing the power, and it is not able to monitor all user data of transformers to reduce costs.

Many monitoring systems use power carrier communication to send data, but the power carrier communication has some disadvantages: serious frequency interference, with the increase in distance the signal attenuation serious, load changes brought the about large electrical noise. Then if we use carrier communication to send data, real-time data, reliability cannot be guaranteed. [4] According to the above requirements, we need a distribution transformer real time monitoring system to detect all operating parameters operation and send it to the monitoring center in time. It leads to online monitoring of key operational parameters of distribution transformers which can provide useful information about the health of transformers which will help the utilities to optimally use their transformers and keep the asset in operation for a longer period. It will help to identify problems before a failure which leads to significant cost savings and more reliability. Widespread use of internet and wi-fi devices such their decreasing costs have made them an attractive option not only for data send but for other network applications.[1]

2. SYSTEM DESCRIPTION

The fig:1 block diagram shows the monitoring device should be placed near the transformer. The components of the block diagram measured various parameters associated with the transformer.

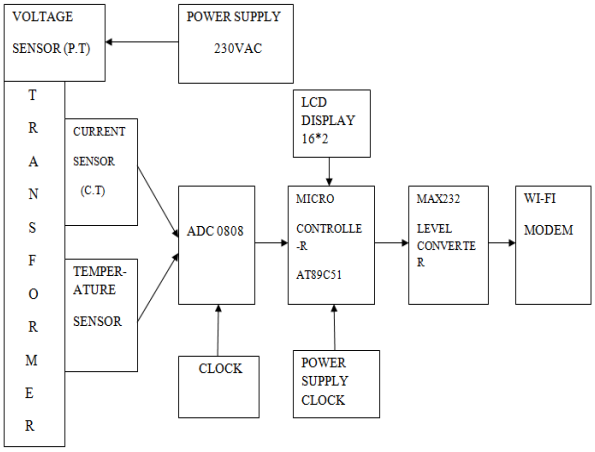

Fig. 1Block diagram

.

This system is designed for online monitoring of distribution transformers parameter can provide useful Information about the transformers health which will help the utilities to optimally use their transformers and keep the asset in operation for a long time. In this system, we used three sensors for monitoring that is voltage sensor, a current sensor, and temperature sensor. We used a power supply to operate microcontroller AT mega 89C51 and wi-fi modem [6].

Above Fig shows the connection between all modules. Sensors sense the data and display it on LCD display at the same time wi-fi module sends the data to the user on given IP address as per program. If we get an unsecured data about the system we can avoid failure. This is proposed a model of real-time transformer monitoring system using iot. This is classified in four parts- Power supply (230v step down transformer, bridge rectifier converter and regulator), controlling, data processing and data uploading.

2.1. VOLTAGE SENSOR

A voltage sensor is a device which detects the voltage in a wire and generates a signal proportional to it. The generated signal may be analog current or voltage or even in digital output. Then this will be utilized to display the measured voltage by a voltmeter or may be stored for more analysis in the system for controlling purpose. [3]

2.2. CURRENT SENSOR

A current sensor is a device that detects electric current in a wire and generates a signal proportional to it. The generated signal could be analog or current or even digital form.Then utilized it to display the measured current in an ammeter or can be stored for analysis in the system for control purpose. The current sensed by sensor the output signal can be:

Direct current input, unipolar, with a unipolar output, which duplicates the waveform of the sensed current digital output, which switches when the sensed current exceeds a certain threshold.[5]

2.3. TEMPERATURE SENSOR

The temperature sensor is the simple ON/OFF thermostatic devices which control a heating system to highly sensitive semiconductor types that can control complex process of the furnace. We know that the movement of molecules and atoms produces heat in kinetic energy form and the greater the movement, the more heat is generated. Temperature Sensors measure the heat or cold (energy) that is generated by an object, allowing us to “sense” or detect temperature producing either an analogue or digital Output.

2.4. MICROCONTROLLER AT89S52

The microcontroller AT89S52 is consumed low power, high-performance CMOS 8-bit microcontroller with 8K bytes of in-system programmable Flash memory.Manufactured by Atmel’s high density non-volatile memory and more compatible with the industry standard 80C51 instruction. This microcontroller provides the following features: 8K bytes of Flash, 256 bytes RAM, 32 I/O lines, Watchdog timer, two data pointer, 3* 16-bit timer/counters, a 6 vector two level interruption, a full duplex serial port, on-chip oscillator, and clock circuitry.[6]

2.5. LCD Module

One of the most common devices attached to an 8051 is an LCD display. Some of the most common LCD connected to the 8051 are 16x2 and 20x2 displays.That means 16 characters per line by 2 lines and 20 characters per line by 2 lines.

2.6. LCD Module

One of the most common devices attached to an 8051 is an LCD display. Some of the most common LCD connected to the 8051 are 16x2 and 20x2 displays. That means 16 characters per line by 2 lines and 20 characters per line by 2 lines.

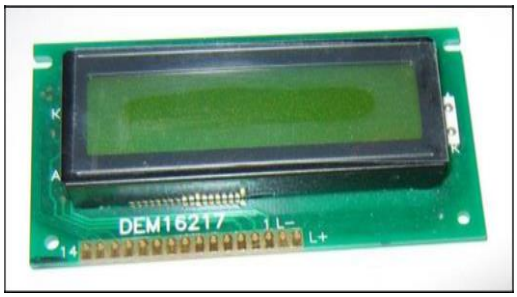

Fig.2.LCD display

2.7. RESULT AND CONCLUSION

Fig.3.showing sensed dataon LCD (temp-29deg.C, volt-24V, and current -28Amp.)

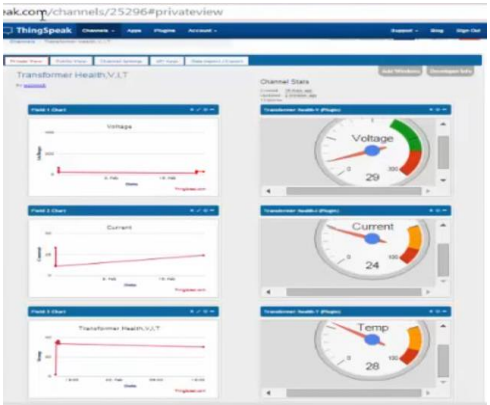

Fig.4.showing same sensed data by our system on the internet.

Our system is working properly and showing data on both LCD and as well as in the internet .the device sensed data is voltage-29V,current-24AMP, and tempreture-28C.This system would be minimizing the requirement of human power and thus providing efficiency and accuracy in the power system.This paper gives almost accurate details of energy theft. This will also help to manage to sense the parameters and also record details for electricity theft. This paper assures the safety and help to decrease in theft level and would not result in any harm to the environment.

REFERENCE

1. Chan, W. L, So, A.T.P. and Lai, L., L.; "Interment Based Transmission Substation Monitoring", IEEE Transaction on Power Systems, Vol. 14, No. 1, February 2014, pp. 293-298.
2. Performance Monitoring of Transformer Parameters in (IJIREEICE) Vol. 3, Issue 8, August 2015.
3. Gsm based transformer monitoring" in "International Journal of Advance Research in Computer and Communication Engineering", Vol.2, Issue3, JAN 3.
4." Distributed Transformer Monitoring System" International Journal of Engineering Trends and Technology (IJETT) - Volume4 issue5- May 2013.
5. Microcontroller Based Substation Monitoring and Control System with Gsm Modem'' IOSR Journal of Electrical and Electronics Engineering (IOSRJEEE) ISSN: 2278-1676 Volume 1, Issue 6 (July-Aug. 2012).
6. Leibfried, T, "Online monitors keep transformers in service", Computer Applications in Power, IEEE, Volume: 11 Issue: 3, July 1998 Page(s): 36 -42

7. aza, S. ; Shafagh, H.; Hewage, K.; Hummen, R. Voigt, T. , Lithe: Lightweight Secure CoAP for the Internet of Things. IEEE Sensors Journal, 13, 10, **201 3** , 3711 - 3720.
8. Ganz, F., Barnaghi, P.; Carrez, F., Information Abstraction for Heterogeneous Real World Internet Data. IEEE Sensors Journal, 13, 10, **2016,** 3793 - 3805.
9. SENSIRION the Sensor Company, Datasheet SHT1x (SHT10, SHT11, SHT15) Humidity and Temperature Sensor IC, Version 5, December 2011.

