INTERNATIONAL JOURNAL OF ADVANCE RESEARCH, IDEAS AND INNOVATIONS IN TECHNOLOGY

ISSN: 2454-132X
Impact factor: 4.295
(Volume3, Issue2)
Available online at www.ijariit.com

A Review Paper on Comparative Research Analysis on LTE Techniques to Reduce PAPR in Multi-Carrier Communication Systems

Ritu
M.R.I.E.M, Rohtak
ritukhatri0912@gmail.com

Tajendar Malik
M.R.I.E.M, Rohtak
tajendarmalik@gmail.com

Abstract*— As we know in today world communication is increasing exponentially. We want best quality of service at economical cost and at high speed. When we look in deep how these parameters can be carried out then lots of problem arises in front of us and one of them is PAPR. There are various technique to reduce like tone injection, OFDM is a multi carrier transmission scheme. This is used in 4th generation wireless communication. The main advantage of OFDM, cross talk between the sub channels is eliminated and inter carrier bands are not required. Coin have two sides similarly OFDM have a some advantages and disadvantages, according to this quotation there have a major drawback arises in the OFDM is known as a PAPR (Peak to average power ratio). PAPR reduction techniques, based on computational complexity, bandwidth expansion, spectral spillage and performance. PAPR problem is reduced by the technique

***Keywords*— PTS, Tone Injection, Tone Reservation, Orthogonal, Interleaved, LTE, Localized, QAM, Mapping**

I. INTRODUCTION

Orthogonal frequency division multiplexing (OFDM) is a one of the multicarrier modulation (MCM) technique which is very useful in the mobile communication for the data transmission. It can increase the bit error rate (BER)[1-2]. OFDM (Orthogonal frequency division multiplexing) has many advantages like robustness in the frequency selective fading channels. It is against the ISI and fading, which causes by multipath propagation, the major drawback in the OFDM (Orthogonal frequency division multiplexing) signal HPA (High power filter) which producing the non-linearity in the system clipping which degraded the bit error rate (BER).peak windowing is also another latest technique which is used in the OFDM it is simply reduced the high peak amplitude of the signal and explain the part of distortion to the spectrum of the signal[5-7].

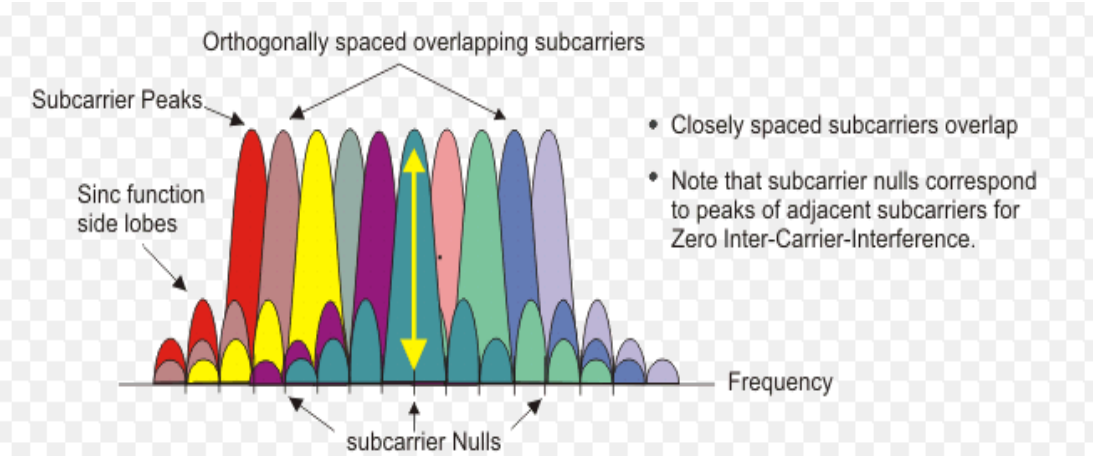

Figure 1 OFDM Signal Frequency Spectra

These are high peaks which limit the system performance are necessary to remove. Let data block of length N be represented by vector Xk= [X0,X1,X2...XN-1] over time interval [0,T], OFDM symbol can be written as

$$X(S)=\sum=0-1x(k)ej2\pi kf0t$$

Mathematically defined as PAPR

$$PAPRdb = 10\log(max(x(t)x*(t))/E(x(t)x*(t)))$$

Where x(t) is the original signal x*(t) is the signal power
E(x(t)x*(t)is the average signal power

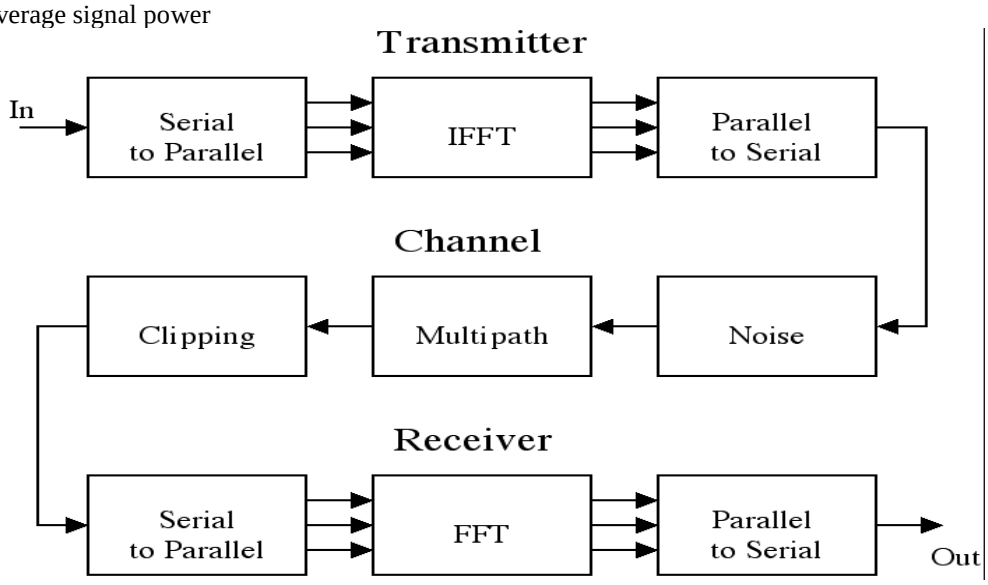

Figure 2 orthogonal frequency division multiplexing block diagram

II. Literature Survey

OFDM PAPR reduction by switching null subcarriers and data subcarriers: K.T. Wong, B.Wang and J complexity C. Chen(2011):.- This new approach requires no channel side data, can be good with existing measures, forces no rate hit, is distortion less, has low calculation al many-sided quality and can supplement most other PAPR decrease strategies[3-4]. The proposed plan could be utilized with any multicarrier framework with invalid subcarriers. To minimize any debasement to the gatekeeper band, one „innermost″ invalid subcarrier. Future work will take issues of utilization of the forecast comes about with the end goal of lessening PAPR diminishment utilizing numerous subcarrier. A Novel Multi-Points Square Mapping Combined With PTS to Reduce PAPR of OFDM Signals Without Side Information: Yang Zhou and Tao Jiang (2009) :In this paper, we propose a novel multi-focuses square mapping (MSM) plan. At that point, portray in subtle element how to consolidate the proposed MSM plan with routine halfway transmit arrangement (C-PTS) plan, named as M-PTS, to decrease the PAPR of OFDM signals. In this plan to figure the issue of PAPR lessening to join the purposed M PTS plan joined with the C PTS plan. In the C PTS utilized single quadrant yet as a part of M PTS utilized 4QAM and 16QAM and utilized four quadrant without side band data C PTS is send effectively transmit and recoup the stage movement of the subcarrier [9]. The M PTS is not present the side data that is by M PTS has better band width efficiency and bit mistake rate when contrasted with C PTS plan. An Efficient Nonlinear Commanding Transform for Reducing PAPR of OFDM Signals: Y.Wang(2012): Diminishment in PAPR and additionally an enhanced BER performance at the same time. Comes about exhibit that the proposed plan can significantly offer better general execution of OFDM framework as far as PAPR lessening, BER execution and transmission capacity proficiency [10]. The SE and EE are expanded with an aggregate transmit power limitation over added substance white Gaussian clamor (AWGN) channel. The OFDM framework with PAPR decrease could accomplish higher SE and EE than the framework without PAPR reduction. Improved Peak Windowing for PAPR Reduction in OFDM: Guoguang Chen, RashidAnsari, Yingwei Yao(2009):- OFDM framework execution corruption because of a low power efficiency and nearness of non straight power enhancement. In this paper to lessen this issue by the assistance of pinnacle windowing strategy with the assistance of In band and out band signal [8]. The OFDM analysis the fluctuation is described by the PAPR that is known as a peak variable (OFDM=CF2) .This is an element which can't transmit the side data and alteration of the receiver in this way, it overcome with the assistance of new pinnacle windowing plan to accomplish the better execution[11-12]. Toward the end it accomplished through windowing plan, are "Relative group of stars error (RCE) and Small contiguous channel rate(ACPR)". This components enhance the execution and beat the fluctuations.

III.Planning of Work/Methodology

PAPR Reduction Techniques

Selective Mapping (SLM): In this strategy the sign real transmit at the most reduced PAPR is chosen from an arrangement of various signs which are speaks to the same data SLM system are extremely adaptable as they don't force any confinement on the regulation which connected in the subcarriers or on their number. Piece chart of the SLM strategy. In the SLM technique, the transmitter generates a set of sufficiently different candidate data blocks, all representing the same information as the original data

block, and selects the most favorable for transmission [10][11]. A block diagram of the SLM technique is shown in figure 2.1.Each data block is multiplied by U different phase sequences, each of length N, $B^{(u)} = [\, b_{u,0}\, ,\, b_{u,1}, \ldots\ldots\ldots b_{u,N-1}\,]^T$. u = 1, 2, · · · U,resulting in U modified data blocks. To include the unmodified data block in the set of modified data blocks, we set $B^{(1)}$ as the all-one vector of length N.

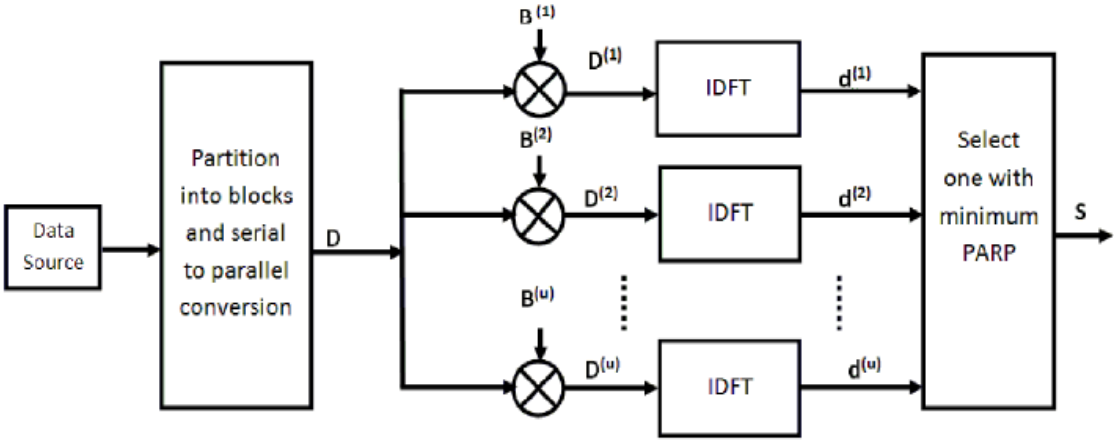

Figure 3 Block diagram of the SLM technique with U different signal representation and phase weights to produce a minimized PAPR signal

Tone Reservation and Tone Injection:

Tone reservation (TR) and tone interjection (TI), explained below, are two efficient techniques to reduce the PAPR of a multi-carrier signal. These methods are based on inserting data-block -dependent subcarriers into reserved or unused band in such a way that the PAPR is minimized for the whole block. This time domain signals can be easily computed at the transmitter and stripped off at the receiver[10]. In the TR technique, the transmitter does not send data on a small portion of subcarriers that are optimized for PAPR reduction. The objective is to find the time domain signal to be added to the original time domain signal d such that the PAPR is reduced. The TI technique is similar to TR but could be more complicated since the injected signal takes the same frequency band as the data. It also results in a power increase on the transmit signal due to the inserted signal power. These techniques do not always comply with the standard, for example in IEEE 802.16d the spectrum loss required by this method is not acceptable, but it is suited for other implementations including IEEE 802.16e.

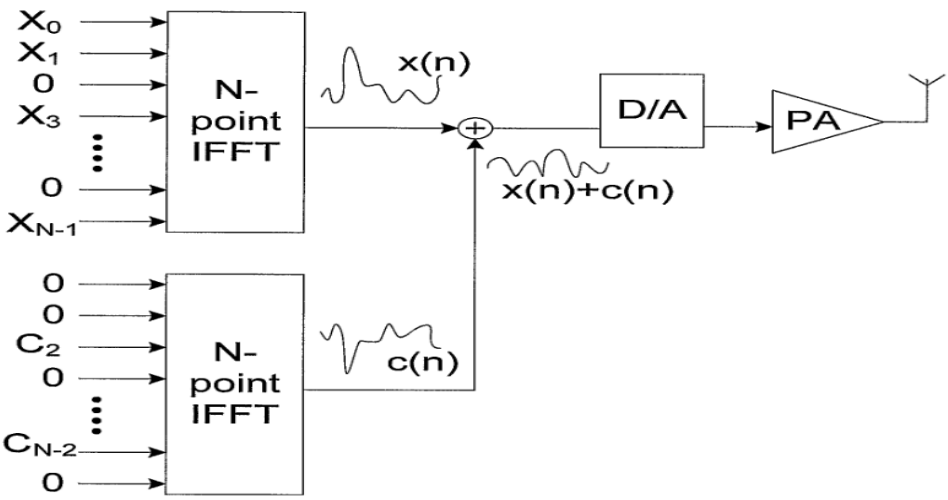

Figure 4 Tone Reservation Technique Block Diagram

Filtering and Clipping: It is the most widely used technique of PAPR reduction which basically clip the parts of the signal and that are outside the allowed region17. For eg. High Power Amplifier (HPA). Mathematical Expression,

$$C(X) = \begin{cases} X, & X <= A \\ A, & X > A \end{cases}$$

Where An is available cut-out level and it is sure genuine number. Transmitter is performed by the section the beneficiary need to evaluate the cut-out that has happened and repay the gotten OFDM image appropriately. There have two parameters which gauge at the recipient.

1. Location of the clip
2. Size of the clip

Sifting is utilized in the wake of section. It diminished the out of band radiation. Yet, in the wake of section it can't diminish in band twisting. However cutting may bring about some pinnacle regrowth so that the sign subsequent to section and sifting will surpass the cut-out level at a few focuses [14]. The procedure continues rehashing until the required yield is not acquired. PAPR at expense of computational many-sided quality increment. CCDF (Complementary Cumulative Distribution Function) the PAPR,

which is defined as the ratio between maximum peak power and the average power of the desecrate OFDM signal can be expressed as

$$PAPR = 10 \cdot \log_{10} \frac{\mathrm{Max}\left[\left|s\left(\frac{nT_s}{N}\right)\right|^2\right]}{E\left[\left|s\left(\frac{nT_s}{N}\right)\right|^2\right]} (\mathrm{dB})$$

IV. SOFTWARE USED AND SIMULATION RESULT

Software: MATLAB Version R2015a: It is powerful software that provides an environment for numerical computation as well as graphical display of outputs. In Matlab the data input is in the ASCII format as well as binary format. It is high-performance language for technical computing integrates computation, visualization, and programming in a simple way where problems and solutions are expressed in familiar mathematical notation.

- Acquisition, Data Exploration, Analysing &Visualization
- Engineering complex drawing and scientific graphics
- Analysing of algorithmic designing
- Mathematical and Computational functions
- Modelling and simulating problems prototyping
- GUI (graphical user interface) building environment.

Using MATLAB, you can solve technical computing problems very easily and time saving as compared to traditional programming languages, such as C, C++, and FORTRAN.
The name MATLAB stands for matrix laboratory.

MATLAB Features

- MATLAB is a high-level language used for numerical computation, visualization, and application development
- It create very friendly environment for iterative exploration, design, and problem solving
- Mathematical functions for solving ordinary differential equations, Fourier analysis, linear algebra, statistics, filtering, optimization, numerical integration
- Development tools for enhancing code quality and maximizing performance
- Tools for building applications with custom graphical interfaces (GUI)
- Functions for integrating MATLAB based algorithms with external applications and we can able to generate code in hex file, c, embedded etc.

CONCLUSION

In our research work a new method for PAPR reduction in long term evolution system will be introduced, which is based on the DFT spread method. DFT spread method is further classified into two methods known as LFDMA (localized FDMA) and IFDMA (interleaved FDMA). We will analyse between IFDMA, LFDMA and OFDMA which one technique is better among them in the uplink transmission where transmitter power efficiency is of great importance in the uplink. In a localized scheme each user uses a set of adjacent subcarriers to transmit its data. This means for localized FDMA (LFDMA) only a fraction of the total bandwidth is used by one user. The advantage of LFDMA is that it achieves multi user diversity in frequency selective channel if each user is assigned subcarriers that have high channel gain.

REFERENCES

[1]SeyranKhademi, "OFDM Peak-to-Average-Power-Ratio Reduction in WiMAX Systems" M.tech thesis Communication Systems and Information Theory Group, Department of Signals and Systems, Chalmers University of Technology, Goteborg, Sweden, 2010

[2] Taewon Hwang, Chenyang Yang, Gang Wu,Shaoqian Li, Geoffrey Ye Li, "*OFDM and Its Wireless Applications:A Survey*", IEEE Transactions on Vehicular Technology, May 2009, Vol. 58, No. 4, pp. 1673-1694.

[3] Ali Behravan,"Evaluation and Compensation of Nonlinear Distortion in Multicarrier CommunicationSystems," Ph.D thesis in Communication System Group, Department of Signals and Systems, ChalmersUniversity of Technology, Gothenburg, Sweden 2006.

[4] J. Armstrong, "Peak-to-Average Power Reduction for OFDM by Repeated Clipping and Frequency Domain Filtering, Elect. Lett., vol. 38, no. 8, pp. 246-47, Feb. 2002.

[5] A. E. Jones and T. A. Wilkinson,"Combined Coding for Error Control and Increased Robustness to System Nonlinearities in OFDM," Proc. IEEE VTC '96, pp. 90408, Atlanta, GA, May 1996.

[6] Seung H. Han, Jae H. Lee, "An overview of peak-to-average power ratio reduction techniques for multicarrier transmission," IEEE Wireless Communications, vol.12, no. 2, pp. 56-65, 2005

[7]Bader HamadAlhasson, Mohammad A. Matin,"PAPR Performance analysis of DFT-spread OFDM for LTE Uplink transmission" IJCSIS Volume 09,No.10, pp. 1-7, October 2011.

[8] Ishangirdhar, Charanjeetsingh, Amitkumar,"Performance Analysis of DFT Spread OFDM Systems" IJACST volume 2, no. 5, pp. 48-52, may 2013.

[9] Cristina Ciochina, Fabien Buda and HikmetSari,"An Analysis of OFDM Peak Power Reduction Techniques for WiMAX Systems," Sequans Communications, 19 Le Parvis, 92073 Paris La Dfense, France, Proceedings of IEEE International Conference on Communications, June 2006.

[10] Seung H. Han, Jae H. Lee,"An overview of peak-to-average power ratio reduction techniques for multicarrier transmission," IEEE Wireless Communications, vol.12, no. 2, pp. 56-65, 2005.

[11] B. S. Krongold and D. L. Jones,"PAR Reduction in OFDM via Active Constellation Extension," IEEE Transactions on Broadcasting, vol.3, pp. 258-268, September 2003.

[12] Zigang Yang, XiaodongWang,"A Sequential Monte Carlo Blind Receiver for OFDM Systems in Frequency-Selective Fading Channels", IEEE Transactions on Signal Processing, 2005, Vol. 50, No. 2, pp. 271

[13] Hiroshi Harada, RamjeePrasad,"Simulation and Software Radio for Mobile Communications", 1st ed., Artech House, Norwood, MA, 2002

[14] B. Le Floch, M. Alard, C. Berrou,"Coded Orthogonal Frequency Division Multiplexing Used in Communication", IEEE Transactions on Communications, 2003, Vol. 83, No. 6, pp. 982-984.

